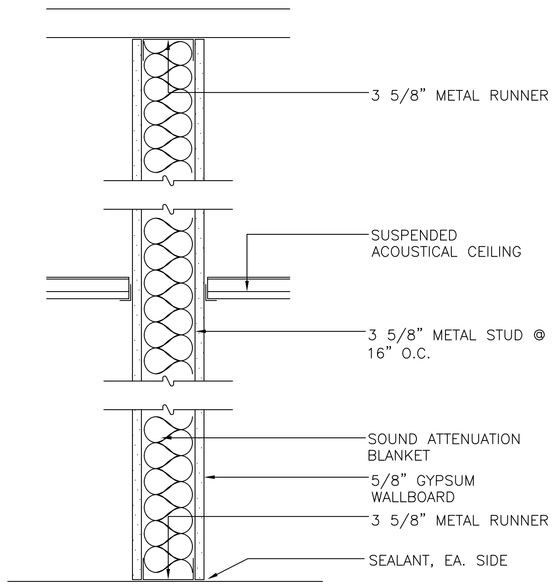

1 / A108 TYPICAL PARTITION
FULL HGT W/ INSULATION STC RATING 49
SCALE: NTS

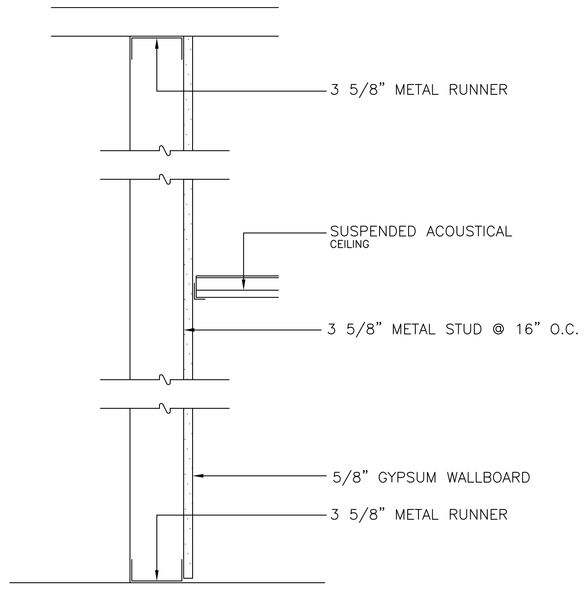

2 / A108 TYPICAL PARTITION
SINGLE LAYER GWB FULL HGT.
SCALE: NTS

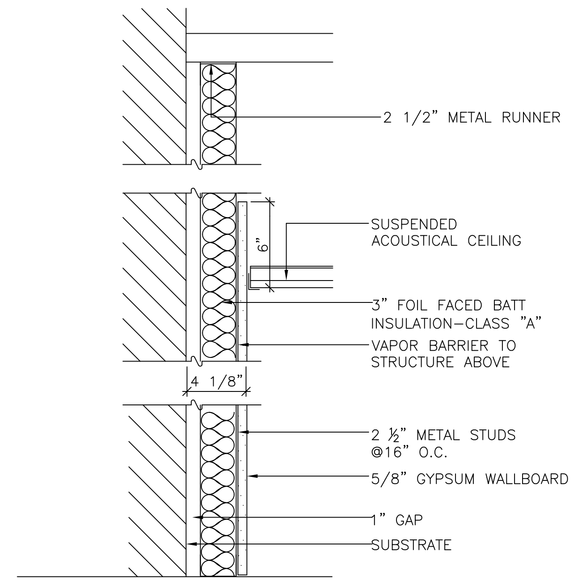

3 / A108 TYPICAL PARTITION
FURRED PARTITION
SCALE: NTS

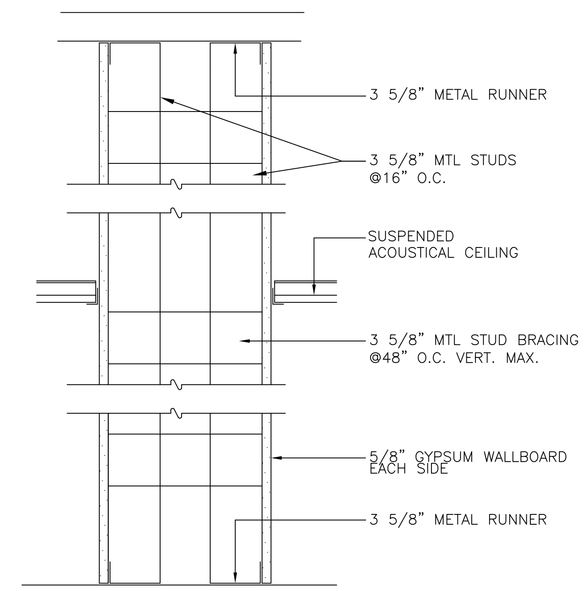

4 / A108 TYPICAL PARTITION
CHASE PARTITION STC RATING 40
SCALE: NTS

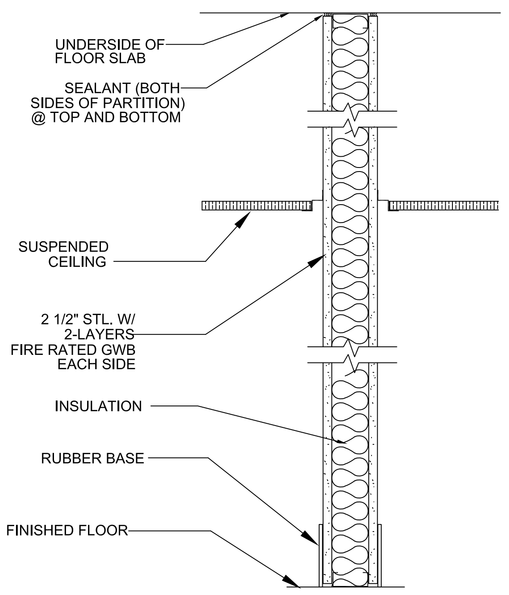

5 / A108 TYPICAL PARTITION SMOKE PARTITION
1–HR RATED & 1–HR RATED FIRE W/ INSULTION
SCALE: NTS

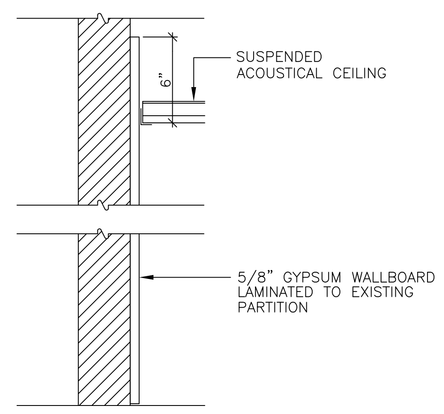

6 / A108 TYPICAL PARTITION
LAMINATE ON EXISTING CHASE
SCALE: NTS

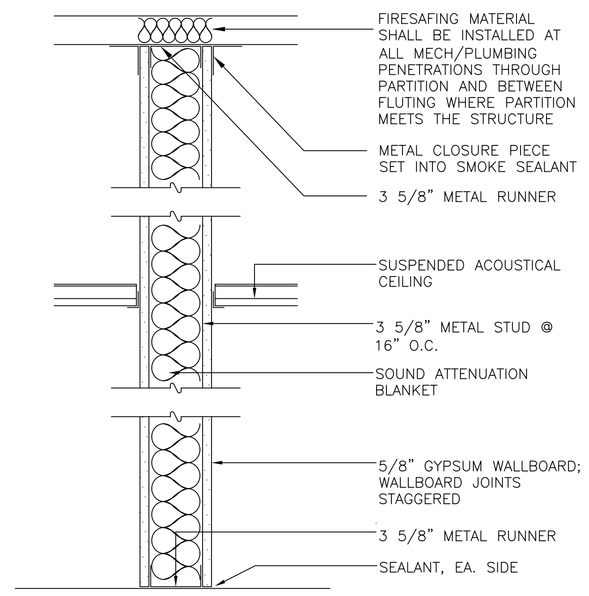

7 / A108 TYPICAL PARTITION
CORRIDOR SMOKE PARTITION (NON–RATED)
SCALE: NTS

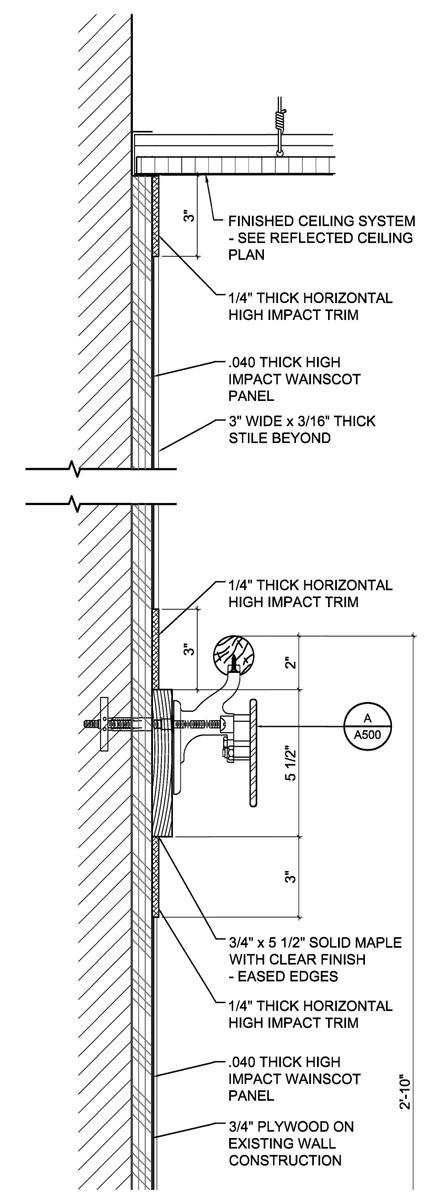

9 / A108 TYPICAL PARTITION
HANDRAIL DETAIL
SCALE: NTS

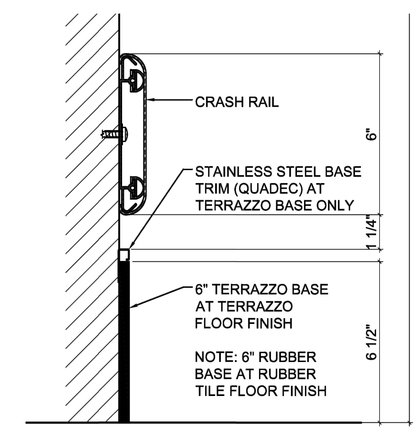

10 / A108 TYPICAL PARTITION
CRASHRAIL DETAIL
SCALE: NTS

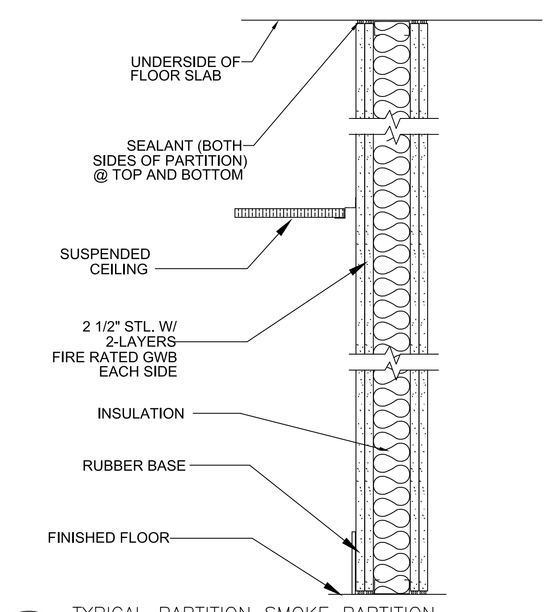

8 / A108 TYPICAL PARTITION SMOKE PARTITION
2–HR RATED & 2–HR RATED FIRE W/ INSULTION
SCALE: NTS

GENERAL NOTES:

VERIFY ALL PENETRATIONS THROUGH EXISTING FIRE RATED AND SMOKE PARTITIONS ARE SEALED (TYP.) SEE 1/A–3 FOR RATED PARTITION TYPES AND LOCATIONS.

NEW HANDRAIL IN MAIN HOSPITAL CORRIDORS, PROVIDE BUMPER GUARDS AT ALL HANDRAIL LOCATIONS WITHIN LIMIT OF WORK AREA.

MATCH EXISTING CONSTRUCTION AT RATED AND SMOKE PARTITIONS. PROVIDE SUBMITTAL WITH CONSTRUCTION AND UL RATED ASSEMBLY FOR VA APPROVAL.

WALL REINFORCEMENT NOTE:

IN GWB PARTITIONS, G.C. SHALL PROVIDE 20 GAUGE SHEET METAL REINFORCING AS REQUIRED FOR SUPPORT OF COUNTERTOPS, CABINETS, SHELVING, AND FIRE EXTINGUISHER SUPPORT BRACKETS. G.C. SHALL PROVIDE 16 GAUGE SHEET METAL ANCHORAGE FOR TOILET ROOM GRAB BARS, HANDRAILS AND BUMPER GUARDS.

IN MASONRY WALLS, G.C. SHALL PROVIDE APPROPRIATE ANCHORING FOR SUPPORT OF COUNTERTOPS, CABINETS, SHELVING, RESTROOM ACCESSORIES, AND FIRE EXTINGUISHER SUPPORT BRACKETS.

SEE DRAWINGS FOR LOCATIONS OF MILLWORK AND TOILET ROOM ACCESSORIES.

ACCESS PANELS

IN GWB PARTITIONS, GEN. CONTRACTOR SHALL PROVIDE ACCESS PANEL UNITS TO MATCH SCHEDULED FIRE RATING OF PARTITION AND/OR CEILING SYSYEM IN WHICH THEY ARE REQUIRED.

NORTH

Revisions:	Date:

CONSULTANT
NOT APPLICABLE

DESIGNER OF RECORD
NOT APPLICABLE

STAMP

Office of Construction and Facilities Management

VA U.S. Department of Veterans Affairs

Drawing Title: TYPICAL WALL PARTITION DETAILS

Phase: BID SET

Project Title: REPAIRS DUE TO FLOOD DAMAGE INCURRED 5/6/23

Project Number: 642-23-118

Building Number: 1

Approved: Project Director Resident Engineer
KEVIN GROGAN
Digitally signed by KEVIN GROGAN
Date: 2023.07.27 10:39:36 -04'00'

Location: CMCVAMC PHILADELPHIA

Issue Date: 7/7/23 | Checked: | Drawn: PK / RZ

Drawing Number: A108

File Path

11/15/2022 11:30:03 AM

VA FORM 08 - 6231