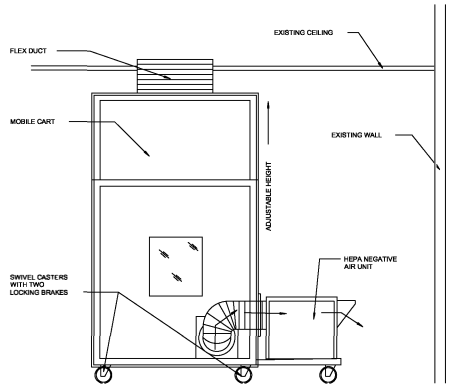

1 ICRA MOBILE CONTAINMENT CART

Scale: 1/2" = 1'-0"

ISLM TEMPORARY BARRIER TAG

PROJECT:	
PRIME CONTRACTOR:	
SUB CONTRACTOR:	
EMERGENCY CONTACT NO.:	
BARRIER INSTALLATION DATE:	
BARRIER EXPIRATION DATE:	

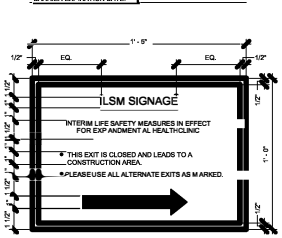

3 ILSM CONSTRUCTION EGRESS SIGNAGE

Scale: 3" = 1'-0"

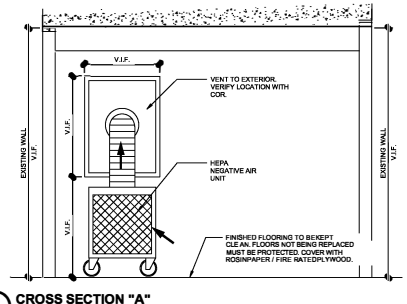

2 CROSS SECTION "A"

Scale: 1/2" = 1'-0"

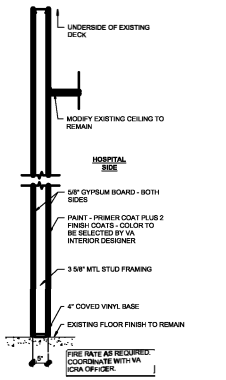

4 ICRA BARRIER WALL TYPE

Scale: 3/4" = 1'-0"

ICRA DOOR SCHEDULE

DOOR NO.	DOOR WIDTH	DOOR HEIGHT	DOOR THICK	DOOR ELEV	FRAME MAT'L	FRAME ELEV	FIRE RATING	HDWR SET	REMARKS
T0000	3' - 0"	7' - 0"	1 3/4"	A	HM	1		1.0	DEDUCT ALT #1
T0001	3' - 0"	7' - 0"	1 3/4"	D	HM	1		1.0	DEDUCT ALT #1
T0002	6' - 0"	7' - 0"	1 3/4"	D	HM	1		2.0	PAIR
T0003	6' - 0"	7' - 0"	1 3/4"	D	HM	1		2.0	PAIR
T0004	3' - 0"	6' - 8"	1 3/4"	A	HM	1		1.0	
T0005	3' - 0"	7' - 0"	1 3/4"	A	HM	1		1.0	
T0006	3' - 0"	7' - 0"	1 3/4"	A	HM	1	90 MIN.	1.0	
T0007	3' - 0"	7' - 0"	1 3/4"	A	HM	1	90 MIN.	1.0	
T0008	3' - 0"	7' - 0"	1 3/4"	A	HM	1		1.0	
T0009	3' - 0"	7' - 0"	1 3/4"	A	HM	1		1.0	
T0010	3' - 0"	7' - 0"	1 3/4"	A	HM	1		1.0	
T0011	3' - 0"	7' - 0"	1 3/4"	A	HM	1		1.0	
T0012	3' - 0"	7' - 0"	1 3/4"	A	HM	1		1.0	
T0013	3' - 0"	9' - 0"	1 3/4"	A	HM	1		1.0	
T0014	3' - 0"	5' - 0"	1 3/4"	A	HM	1		1.0	
T0015	3' - 0"	6' - 8"	1 3/4"	A	HM	1		1.0	DEDUCT ALT #1
T0016	3' - 0"	7' - 0"	1 3/4"	A	HM	1		1.0	

NOTE: ALL EXISTINGRENOVATION AREAS TO BE PRESUMED AS HAVING AS BESTOS CONT AININGM ATERIAL.

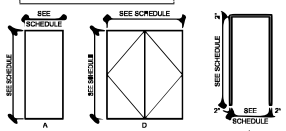

HARDWARE SET 1.0

3	HINGES	TA2714	630	MK
1	DUST PROOF STRIKE PLATE	570	32D	RO
1	LATCH SET	V ASPECF01	26D	
1	DOOR CLOSER	DC8210XA11	689	CO
2	KICK PLATES	K1050F	32D	RO
1	GASKETING	S888 X HEAD & JAMBS		PE

HARDWARE SET 2.0

6	HINGES	TA2714	630	MK
1	FLUSH BOLTS	284	32D	RO
1	DUST PROOF STRIKE	570	32D	RO
2	PASSAGE SET	ML2010	26D	CO
2	COORDINATOR	2800 SERIES	32D	RO
1	ASTRAGAL	BY DOOR MANUF.		
2	DOOR CLOSER	DC8210XA11	689	CO
4	KICK PLATES	K1050F	32D	RO
2	GASKETING	S888 X HEAD & JAMBS		PE

MANUFACTURER'S

CORBIN RUSS WIN	CO
MCKINNEY	MK
PEMKO	PE
ROCKWOOD	RO

NOTES:

HARDWARE MANUFACTURER'SLISTED AS BASIS OF DESIGN. ALTERNATE MANUF ACTURERS ACCEPTA BLE, SUBJECT TOREVIEW BY ARCHITECT ANDC.O.R. FOR EQUAL QUALITY COMPLIANCE.

LATCHSETTO SUPPORT TH AT WHICH AREUSED AT THIS F ACILITY, COORDINATE WITH C.O.R.

ICRA NOTES

DUST CONTROL PLAN NOTES

1. THEV AMCINFECTION CONTROL GROUPH AS CONFIRMED THEDESIGNATIONFOR THIS PROJECT IS LEVEL IVFORTHECI ASS OF PRECAUTIONSOR LEVEL OF INFECTION CONTROL ACTIVITIES.HARD SURF ACE B ARRIERSSHALL BEUSED EXCEPT IN THE AREAINDICATEDON THEPHASING PLAN WITH PLASTIC BARRIERS (MINIMUM 4MILJTO SE AL ARE A FROM NON-WORK AREAS LONG AS THESPRINKLER SYSTEM IS NT ACT ANDACTIVE.
2. THIS PROJECT NEEDS AN ENTRY VESTIBULE FOR CLOTHING CHANGES (PROVIDE AND LOCATE A STAGING AREA FOR HAZMAT SUITS NEAR THE PLASTIC BARRIER ENTRANCE SPACES - CONSTRUCTION ANTEROOM. THEY SHALL BE USED WHEN GOING INTO CONSTRUCTION AREA AND LEAVING THE CONSTRUCTION AREA) AND TOOL STORAGE AND TIGHT SEALS SHALL BE MAINTAINED AT THE FULL PERIMETER OF WALLS AND WALL PENETRATIONS. ANY DUST SHALL BE IMMEDIATELY CLEANED IF TRACKED OUTSIDE OF THE CONSTRUCTION BARRIER. UPON COMPLETION OF THE CONSTRUCTION PHASE, DUST BARRIERS SHALL BE REMOVED CAREFULLY TO MINIMIZE SPREADING OF DUST AND THE CONTRACTOR SHALL HAVE TEMPORARY DUST PROTECTION IN PLACE BEFORE REMOVAL OF A PERMANENT BARRIER. [AFTER EACH PHASE, PERFORM TASKS STATED IN CONTAMINATION OF PATIENT ROOMS, SUPPLIES, EQUIPMENT AND RELATED AREAS NOTE 2.
3. PROVIDES TICKY MATS AND BLANKET AT THE PLASTIC BARRIER ENTRANCESPACES (CONSTRUCTION ANTEROOM) ANDCHANGE DAILY ORMORE OFTENAS NEEDEDTO PREVENT THE SPREAD OF DUST ANDDEBRIS INTO ADJACENTCLEAN SPACE.

INTERNAL DEMOLITION AND CONSTRUCTION ACTIVITIES DUST AND DE BRIS CONTROL

1. USE CORRIDORS AS PRIMARY CONSTRUCTION ACCESS.
2. TRAFFIC CONTROL: DESIGN ATED ENTRY AND EXIT PROCEDURESSH ALL BEDEFINED.EGRESS PATHSSHALL BEFREEOFDEBRIS. DESIGNATEDLEV ATORSSHALL BE USED DURING SCHEDULED TIMES; AND ONLY AUTHORIZED PERSONNEL SHALL BE ALLOWED TO ENTER THE CONSTRUCTION ZONE. SIGNAGESHALLDIRECT PEDESTRIAN TRAFFIC AWAY FROMTHE CONSTRUCTION ARE A AND MATERIALS.
3. CONTRACTOR SHALLUSE TWOCARTSTO TRANSFER CONSTRUCTIONMATERIALIN AND OUT OF THE PROJECT - ACLEANCART SH ALL BEUSED; THE NOT-SO-CLEAN CART SHALL BEUSED BETWEEN THEMAIN ENTRY AND THE CONSTRUCTIONSTAGINGPREP AREA.
4. DEMOLITION DE BRIS DE BRIS SHALL BEREMOVEDIN CARTS WITH TIGHTLY FITTED COVERS, USINGDESIGNATED TRAFFICROUTES. EFFORTSSHALL BEMADETO MINIMIZE USE OF ELEVATORS WITH ANEMPHASISON TRANSPORT DURINGTHE LOWEST PERIODOF ACTIVITY. DE BRISSHALL BEREMOVED DAILY AND AT TIMES SPECIFIED BY THEV AMC. IFCHUTESARE USEDTO DIR ECTDE BRISOUTSIDE, USEHIGH EFFICIENCY PARTICULATE AIR (HEPA) FILTERED NEG ATIVE AIRMACHINESSHA L BEUSED, AND THE CHUTE OPENINGSH ALL BE SEALED WHEN NO TIN USE. FILTERS SH ALL BE BAGGED ANDSE ALED BEFORE BEINGTRANSPORTED OUT OF THE CONSTRUCTION AREA. THE CONTRACTOR SHALLNOT HAULDE BRISTHROUGHP ATIENT CARE AREAS WITHOUTPRIOR APPROVALOF THE COR.
5. EXTERIOR WINDOWS: WINDO WSSH ALL BESEAL ED TOMINIMIZEINFILTRATION FROMANY ADJACENTEXCAVATION DE BRIS.
6. ALL EQUIPMENT TOREMAIN IN ASSOCIATEDROOMSSH ALL BE COVEREDAND PROTECTED PRIORSTARTING EACH CONSTRUCTION PHASE.

VENTILATION AND ENVIRONMENTAL CONTROLS

1. AIR SYSTEM FLO W: THE CORVERIFY AND ACKNOWLEDGE CONTRACTOR WHETHERTHE CONSTRUCTION AREA USESFRESHOUTSIDEOR RE-CIRCULATED AIR; FILTERSSHALL BE ADDEDOR RETURN VENTS OVERRIDED AND NEEDED WITH FILTER MATERIAL OR PLASTIC AIR MUST FLOWFROM CLEAN TO DIRTY AREAS.
2. NEG ATIVE AIR PRESSURE: THE AIR WITHIN THE CONSTRUCTION AREA SHALL BE NEGATIVE WITH RESPECT TOSURROUNDING AREAS AND WITH NO DISRUPTIONOF AIR SYSTEMSOF ADJACENT AREAS. USEOF THE NEGATIVE AIR PRESSURE SYSTEM WITHIN THEENCLOSURE TOREMOVEDUST SHALL PASS AIR THROUGH AN INDUSTRIAL GRADE, PORTABLE HEP A FILTER CAPA BLE OFFILTRATION R ATES OF 300-800 CU BICFEET PER MINUTE (F3/MIN), OR EXHAUST AIR DIRECTLY TO THE OUTSIDE IF APPROVED BY VAMC. IF EXHAUST SHALL BE TIED INTO A RE-CIRCULATED AIR SYSTEM, A PRE-FILTER AND HEPA FILTER SHALL BE USED BEFORE EXHAUST TO PREVENT CONTAMIN ATION OF THE DUCTS.
3. FOR EXHAUST DUCT ROUTING THROUGHRROOR: INSTALL HARD DUCT WITHNON-FLANGE HANGERSHUNGFROMCEILING IMMEDIATELY BELOW DUCT SH ALL BE AMINIMUM OF 7-2' A.F.F.
4. ADJACENT AREAS: THESTATUS OF SEALEDPENETRATIONS AND INTACT CEILING SHALL BE VERIFIED DAILY.
5. AIR EXCHANGER ATES AND PRESSURE RELATIONSHIPS: VAMC AND CONTRACTOR SHALL VERIFY ANDMAINT AIN PROPER RA TIOS IN CRITICAL AREAS NEAR CONSTRUCTION ACTIVITY ANDENSURE AIR IS NOT BEINGRE-CIRCULATED WITHOUT FILTRATION FROM THE CONSTRUCTION AREA ELSE WHERE. PROVIDE AIR PRESSURE TESTING THROUGHOUT THE PROJECT IN THE FREQUENCY AS IDEN TIFIED BY THE COR.

CONTAMINATION OF PATIENT ROOMS, SUPP IES, EQUIPMENT AND RELATED AREAS

1. **WORKSITE CLOTHING:** CONTRACTOR PERSONNEL CLOTHING SHALL BE FREE OF LOOSE SOIL AND DEBRIS BEFORE LEAVING THE CONSTRUCTION AREA. IF PROTECTIVE APPAREL IS NOT WORN (E.G., COVERALLS, FOOTTEDAR AND HEADGEAR) A HEPA-FILTERED VACUUM SHALL BE USED TO REMOVE DUST FROM CLOTHING BEFORE LEAVING THE BARRICADE. IF PROTECTIVE [illegible] IS UTILIZED, THE CONTRACTOR SHALL CONSTRUCT A SPACE OR ANTEROOM FOR CHANGING CLOTHING AND STORING EQUIPMENT DESIGNATED AREA. ALL EQUIPMENT, TOOLS, TOOL CARTS, AND MATERIALS TRANSPORTED THROUGH OCCUPIED AREAS SHALL BE MADE FREE FROM DUST AND MOISTURE BY VACUUMING AND WET WIPING BEFORE THEIR REMOVAL FROM THE CONSTRUCTION ZONE OR WORK AREA.
2. POST CONSTRUCTION: DO NOT REMOVE BARRIERS AND KEEP ALL HVAC ISOLATION UNTIL CONTRACTOR HAS CLEANED CONSTRUCTION SITE. EMS STAFF HAS DONE A TERMINAL CLEANING, AND VA INFECTIOUS DISEASE CONTROL HAS INSPECTED AND APPROVED THE CLEANING.

INFECTION CONTROL RISK MITIGATION RECOMMENDATIONS MATRIX OF PRECAUTIONS FOR CONSTRUCTION AND RENOVATION

Type of Construction / Project Activity Table

TYPE A	**Inspection and Non-Invasive Activities** Includes, but is not limited to: • Removal of ceiling tile for visual inspection-limited to 1 tile per 50 square feet with limited exposure time. • Limited building system maintenance (e.g., pneumatic tube station, HVAC system, fire suppression system, electrical and carpentry work to include painting without sanding) that does not create dust or debris. • Clean plumbing activity limited in nature.
TYPE B	**Small scale, short duration activities which create minimal dust** Includes, but is not limited to: • Work conducted above the ceiling (e.g., prolonged inspection or repair of firewalls and barriers, installation of conduit and/or cabling, and access to mechanical and/or electrical chase spaces). • Ten shutdowns/startup. • Installation of electrical devices or new flooring that produces minimal dust and debris. • The removal of drywall where minimal dust and debris is created. • Controlled sanding activities (e.g., wet or dry sanding) that produce minimal dust and debris.
TYPE C	**Work that generates a moderate to high level of dust or requires demolition or removal of any fixed building components or assemblies** Includes, but is not limited to: • Removal of preexisting floor covering, walls, casework or other building components. • New drywall placement. • Renovation work in a single room. • Remodeling cable pathway or invasive electrical work above ceilings. • The removal of drywall where a moderate amount of dust and debris is created. • Dry sanding where a moderate amount of dust and debris is created. • Work creating significant vibration and/or noise. • Any activity that cannot be completed in a single work shift.
TYPE D	**Major demolition and construction projects** Includes, but is not limited to: • Removal or replacement of building system component(s). • Removal/installation of drywall partitions. • Invasive large-scale new building construction. • Renovation work in two or more rooms.

Patient Risk Group Table

Group 1 Low Risk	Group 2 Medium Risk	Group 3 High Risk	Group 4 Highest Risk
• Office areas (non-clinical) • PES/GMS areas	• Physical Therapy • Radiology departments • All patient waiting rooms • All outpatient clinics • Research Areas • Respiratory Therapy	• Emergency Room • Clinical Laboratories (specimen) • Same Day Surgery • Pharmacy • Nutrition and Food Service/Canteen • Procedural Areas (GI) • Inpatient Mental Health	• *Any area caring for immunodeficient patients* • Cardiac Cath Lab/IR • Central Sterile Supply • Sterile Processing Service • Intensive Care Units • Medical/Surgical Units • Negative pressure isolation rooms • Outpatient Chemotherapy Areas • Operating rooms • Post Anesthesia Care Unit • Dialysis • Dialysis

Infection Control Matrix - Class of Precautions: Construction Project by Patient Risk

Patient Risk Group	Construction Project Type: TYPE A	TYPE B	TYPE C	TYPE D
LOW Risk Group 1	I	II	II	III
MEDIUM Risk Group 2	I	II	III	IV
HIGH Risk Group 3	I	III	IV	V
HIGHEST Risk Group 4	III	IV	V	V

Note: Infection Control requires will be required when the Construction Activity and Risk Level indicate that Class III, Class IV, and/or Class V control procedures are necessary.

CONSTRUCTION ACTIV"IES SHALL BE CLASSIFIED AS FOLLOWS UNLESS NOTED O"HERWISE:
1. INSTALLATION OF CABLE TWIN IN CORRIDOR CEILINGS SHALL BE CONSIDERED CONSTRUCTION ACTIVITY TYPE B.
2. ALL CONDUIT SPECIFIED TO BE INSTALLED IN WALL SHALL BE CONSIDERED CONSTRUCTION ACTIVITY TYPE C.
3. CONSTRUCTION OF NEW ROOMS SHALL BE CONSIDERED CONSTRUCTION ACTIVITY TYPE D.
4. INSTALLATION OF NEW DOORS TO OR FROM EXISTING SPACES SHALL BE CONSIDERED CONSTRUCTION ACTIVITY TYPE C.

INFECTION CONTROL RISK MITIGATION RECOMMENDATIONS MATRIX OF PRECAUTIONS FOR CONSTRUCTION AND RENOVATION

It is the Contractor's Responsibility to provide the following Infection Control Precautions depending upon the Area Class Designation

	During Construction Project	Upon Completion of Project
CLASS III	1. Includes all activities required by Class II 2. Obtain Infection Control Permit from Hospital Safety Officer or Facilities Management Maintenance and Engineering department before construction begins. 3. Provide active means to prevent airborne dust dispersion into the occupied areas. 4. Means for controlling minimal dust dispersion may include hand-held HEPA vacuum devices, portable exhaust ventilation, or activities of work zone by closing room door. 5. Remove or isolate return air diffusers to avoid dust from entering the HVAC system. 6. Remove or isolate the supply air diffusers to avoid positive pressurization of the space. 7. If work area is contained, then it must be remoisty to negatively pressurized at all times. 8. Seal all doors with tape that will not leave residue. 9. Contain all trash and debris in the work area. 10. Moisten dust/debris and dismantle construction waste (with a hand fog) must be used to transport trash and debris from the construction areas. These containers must be damp-wiped cleaned and free of visible dust/debris before leaving the contained work area. 11. Install a sticky (dust collection) mat at entrance of contained work area based on facility policy. Sticky mats must be changed routinely and when sticky or not. 12. Maintain clean surroundings when area is still contained by damp mopping or HEPA vacuuming surfaces. 13. Clean construction area at the end of each shift by damp mopping or HEPA Vacuum.	For Type C activities, follow procedures for Class IV. Cleaning: 1. Clean work areas including all environmental surfaces, high horizontal surfaces and flooring materials. 2. Check all supply and return air registers for dust accumulation on upper surfaces as well as air diffuser surfaces. HVAC Systems: 1. Remove isolation of HVAC system in areas where work is being performed. Verify that HVAC systems are clean and operational. 2. Verify the HVAC systems meet original airflow and air exchange design specifications.
CLASS IV	1. Includes all activities required by Class III 2. Obtain Infection Control Permit from Hospital Safety Officer or Facilities Management Maintenance and Engineering department before construction begins. 3. Construct and complete critical barriers meeting NFPA 241 requirements. Barriers must extend to the ceiling or if ceiling tile is removed, to the deck above. 4. All (plastic or hard) barrier construction activities must be completed in a manner that prevents dust release. Plastic barriers must be effectively affixed to ground and ceiling and secure from movement or damage. Apply tape that will not leave a residue to seal gaps between barriers, ceiling or floor. 5. Seal all penetrations in containment barriers, entrance barriers, including floors and ceiling using approved materials (i.E. schedule firestop if applicable for barrier type). 6. Construct entrance large enough for equipment staging, cart cleaning, workers. The entrance must be constructed adjacent to entrance of construction work area. 7. Personnel will be required to wear coveralls at all times during Class V work activities. Coveralls must be removed before leaving the entrance. 8. Remove or isolate return air diffusers to avoid dust entering the HVAC system. 9. Remove or isolate the supply air diffusers to avoid positive pressurization of the space. 10. Negative airflow pattern must be maintained from the entry point to the entrances and into the construction area. The airflow must cascade from outside to inside the construction area. The entire construction area must remain negatively pressurized. 11. Maintain negative pressurization of the entire workspace using HEPA exhaust air systems directed outdoors. Exhaust discharged directly to the outdoors that is 25 feet or greater from entrances, air intakes and windows does not require HEPA-filtered air. 12. If exhaust is directed indoors, then the system must be HEPA filtered. Prior to start of work, HEPA filtration must be verified by particulate measurement as no less than 99.97% efficiency and must not alter or change airflow/pressure relationships in other areas. 13. Exhaust into shared or recirculating HVAC systems, or other shared exhaust systems (e.g., bathroom exhaust) is not acceptable. 14. Install device (e.g., magnehelic, manometer, or digital monitoring) on exterior of work containment to continually monitor negative pressurization. The "bell in the wall" or similar apparatus are not acceptable. 15. Contain all trash and debris in the work area. 16. Non-premoisten and dismantle containers (with a hand fog) must be used to transport trash and debris from the construction areas. These containers must be damp-wiped cleaned and free of visible dust/debris before leaving the contained work area. 17. Worker clothing must be clean and free of visible dust before leaving the work area. 18. Moisten dust/debris and dismantle construction waste (with a hand fog) must be used to transport trash and debris from the construction areas. These containers must be damp-wiped cleaned and free of visible dust/debris before leaving the contained work area. 19. Install a sticky (dust collection) mat at entrance of contained work area based on facility policy. Sticky mats must be changed routinely and when sticky or not. 20. Consider collection of particulate data during work to monitor and ensure that contaminates do not enter the occupied spaces. Routine collection of particulate samples may be used to verify HEPA filtration efficiencies.	Construction areas must be inspected by an infection preventionist or designee and engineering representative for discontinuation or downgrading of ICRA precautions. Work Area Cleaning: 1. Clean work areas including all environmental surfaces, high horizontal surfaces and flooring materials. 2. Check all supply and return air registers for dust accumulation on upper surfaces as well as air diffuser surfaces. Removal of Critical Barriers: 1. Critical barriers must remain in place during all work involving drywall removal, creation of dust and activities beyond simple touch-up work. The barrier may NOT be removed until a work area cleaning has been performed. 2. All (plastic or hard) barrier removal activities must be completed in a manner that prevents dust release. Use the following precautions when removing hard barriers: 1. Carefully remove screws and painter tape. 2. If dust will be generated during screw removal, use hand-held HEPA vacuum. 3. Drywall cutting is prohibited during removal process. 4. Clean all dust tracks with HEPA vacuum before removing outer hard barrier. 5. Use a plastic barrier to enclose area if dust could be generated. Negative Air Requirements: 1. The use of negative air must be designed to remove contaminates from the work area. 2. Negative air devices must remain operational at all times and in place for a period after completion of dust creating activities to remove contaminants from the work area and before removal of critical barriers. HVAC systems: 1. Upon removal of critical barriers, remove isolation of HVAC system in areas where work is being performed. 2. Verify that HVAC systems are clean and operational. 3. Verify the HVAC systems meets original airflow and air exchange design specifications.
CLASS V	1. Includes all activities required by Class IV 2. Obtain Infection Control Permit from Hospital Safety Officer or Facilities Management Maintenance and Engineering department before construction begins. 3. Construct and complete critical barriers meeting NFPA 241 requirements. Barriers must extend to the ceiling or if ceiling tile is removed, to the deck above. 4. All (plastic or hard) barrier construction activities must be completed in a manner that prevents dust release. Plastic barriers must be effectively affixed to ground and ceiling and secure from movement or damage. Apply tape that will not leave a residue to seal gaps between barriers, ceiling or floor. 5. Seal all penetrations in containment barriers, entrance barriers, including floors and ceiling using approved materials (i.E. schedule firestop if applicable for barrier type). 6. Construct entrance large enough for equipment staging, cart cleaning, workers. The entrance must be constructed adjacent to entrance of construction work area. 7. Personnel will be required to wear coveralls at all times during Class V work activities. Coveralls must be removed before leaving the entrance. 8. Remove or isolate return air diffusers to avoid dust entering the HVAC system. 9. Remove or isolate the supply air diffusers to avoid positive pressurization of the space. 10. Negative airflow pattern must be maintained from the entry point to the entrances and into the construction area. The airflow must cascade from outside to inside the construction area. The entire construction area must remain negatively pressurized. 11. Maintain negative pressurization of the entire workspace using HEPA exhaust air systems directed outdoors. Exhaust discharged directly to the outdoors that is 25 feet or greater from entrances, air intakes and windows does not require HEPA-filtered air. 12. If exhaust is directed indoors, then the system must be HEPA filtered. Prior to start of work, HEPA filtration must be verified by particulate measurement as no less than 99.97% efficiency and must not alter or change airflow/pressure relationships in other areas. 13. Exhaust into shared or recirculating HVAC systems, or other shared exhaust systems (bathroom exhaust) is not acceptable. 14. Install device (e.g., magnehelic, manometer, or digital monitoring) on exterior of work containment to continually monitor negative pressurization. The "bell in the wall" or similar apparatus are not acceptable. 15. Contain all trash and debris in the work area. 16. Non-premoisten and dismantle containers (with a hand fog) must be used to transport trash and debris from the construction areas. These containers must be damp-wiped cleaned and free of visible dust/debris before leaving the contained work area. 17. Worker clothing must be clean and free of visible dust before leaving the work area entrance. 18. Workers must wear shoe covers prior to entry into the work area. Shoe covers must be changed prior to exiting the entrance to the occupied space (non-work area). Damaged shoe covers must be immediately changed. 19. Install a sticky (dust collection) mat at entrance of contained work area based on facility policy. Sticky mats must be changed routinely and when sticky or not. 20. Consider collection of particulate data during work to monitor and ensure that contaminates do not enter the occupied spaces. Routine collection of particulate samples may be used to verify HEPA filtration efficiencies.	Construction areas must be inspected by an infection preventionist or designee and engineering representative for discontinuation or downgrading of ICRA precautions. Work Area Cleaning: 1. Clean work areas including all environmental surfaces, high horizontal surfaces and flooring materials. 2. Check all supply and return air registers for dust accumulation on upper surfaces as well as air diffuser surfaces. Removal of Critical Barriers: 1. Critical barriers must remain in place during all work involving drywall removal, creation of dust and activities beyond simple touch-up work. The barrier may NOT be removed until a work area cleaning has been performed. 2. All (plastic or hard) barrier removal activities must be completed in a manner that prevents dust release. Use the following precautions when removing hard barriers: 1. Carefully remove screws and painter tape. 2. If dust will be generated during screw removal, use hand-held HEPA vacuum. 3. Drywall cutting is prohibited during removal process. 4. Clean all dust tracks with HEPA vacuum before removing outer hard barrier. 5. Use a plastic barrier to enclose area if dust could be generated. Negative Air Requirements: 1. The use of negative air must be designed to remove contaminates from the work area. 2. Negative air devices must remain operational at all times and in place for a period after completion of dust creating activities to remove contaminants from the work area and before removal of critical barriers. HVAC systems: 1. Upon removal of critical barriers, remove isolation of HVAC system in areas where work is being performed. 2. Verify that HVAC systems are clean and operational. 3. Verify the HVAC systems meets original airflow and air exchange design specifications.

It is the Contractor's Responsibility to provide the following Infection Control Precautions depending upon the Area Class Designation

	During Construction Project	Upon Completion of Project
CLASS I	1. Execute work by methods to minimize raising dust from construction operations. 2. Perform noninvasive work activity as to not block or interrupt patient care. 3. Perform noninvasive work activities in areas that are not directly occupied with patients. 4. Perform noninvasive work activity in a manner that does not create dust. 5. Immediately replace any displaced ceiling tile before leaving the area and/or sit and of noninvasive work activity.	Cleaning: 1. Clean work areas including all environmental surfaces, high horizontal surfaces and flooring materials. 2. Check all supply and return air registers for dust accumulation on upper surfaces as well as air diffuser surfaces. HVAC Systems: 1. Remove isolation of HVAC system in areas where work is being performed. Verify that HVAC systems are clean and operational. 2. Verify the HVAC systems meet original airflow and air exchange design specifications.
CLASS II	1. Includes all activities required by Class I 2. Perform only limited dust work and/or activities designed for basic facilities and engineering work. 3. Perform limited dust and invasive work following standing precautions procedures approved by the organization 4. This Class of Precautions must never be used for construction or renovation activities. 5. Provide active means to prevent airborne dust from dispersing into atmosphere. 6. Water mist work surfaces to control dust while cutting. 7. Seal unused doors with duct tape. 8. Block off and seal air vents. 9. Replace activate wall-off made of entrance and exit of work area. Replace used mats in accordance with manufacturer's recommendations. 10. Remove or isolate HVAC system in area where work is being done to prevent contamination of duct system.	Cleaning: 1. Clean work areas including all environmental surfaces, high horizontal surfaces and flooring materials. 2. Check all supply and return air registers for dust accumulation on upper surfaces as well as air diffuser surfaces. HVAC Systems: 1. Remove isolation of HVAC system in areas where work is being performed. Verify that HVAC systems are clean and operational. 2. Verify the HVAC systems meet original airflow and air exchange design specifications.

FULLY SPRINKLERED

100% CONSTRUCTION DOCUMENTS

CONSULTANTS:	PROJECT MANAGER Headquarters:	ACS Project Number 20-083	Office of Construction and Facilities Management	Drawing Title: ICRA INFORMATION AND DETAILS	Project Title: 9th floor Mental health CLINIC
		919-8	VA U.S. Department of Veterans Affairs	Location: WILKES-BARRE VA MEDICAL CENTER 1111 EAST END BLVD WILKES-BARRE, PA 18711	VA PROJECT NUMBER 693-19-106
				Approved	Building Number # 1
# Revisions: Date				Date: DECEMBER 19, 2023 / Checked: WVS / Drawn: GTS	Drawing Number G-009
					Dwg 9 of 12

C:\Users\gscott\Documents\A_20-083-Wilkes Barre Mental Health_gscott@acg-pa.com.rvt

V AFORM 08-6231