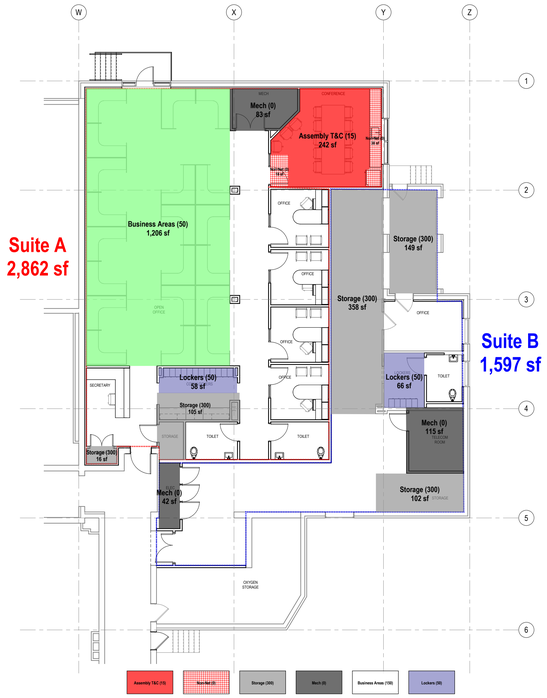

C2 OCCUPANT LOAD (OL) - LEVEL 01
NO SCALE

Wilkes-Barre VA (19.25) - Renovate 9th Floor Mental Health					STORY 01 - Bldg 17				TOTALS				
2021 NFPA 101 LSC Table 7.3.1.2					SUITE A		SUITE B		Total Occupant Load (MOE)				Total OL (PF)
FUNCTION OF SPACE	Area/Occ	Gross	Net	Classification	Area	OL	Area	OL	Total Area		Total OL		
	A				B0	C0	B1	C1	BT	BT%	CT	CT%	DT
ACCESSORY													
MECHANICAL	500 sf	•		F-1/2	83 sf	1	157 sf	1	240 sf	5.4%	2	3.0%	0
STORAGE	300 sf	•		S-1/2	121 sf	1	609 sf	3	730 sf	16.4%	4	6.1%	0
ASSEMBLY W/O FIXED SEATS													
ASSEMBLY - UNCONCENTRATED (CHAIRS & TABLES)													
AUDITORIUMS	15 sf		•	A-3a	242 sf	17	0 sf	0	242 sf	5.4%	17	25.8%	17
BUSINESS AREAS	150 sf	•		B	1,096 sf	8	765 sf	6	1,861 sf	41.7%	14	21.2%	14
BUSINESS AREAS - CONCENTRATED	50 sf	•		B	1,206 sf	25	0 sf	0	1,206 sf	27.0%	25	37.9%	25
LOCKER ROOMS	50 sf	•		B	58 sf	2	66 sf	2	124 sf	2.8%	4	6.1%	4
NON-NET FLOOR AREA					56 sf		0 sf		56 sf	1.3%			
TOTALS : Areas & Occupant Loads					2,862 sf	54	1,597 sf	12	4,459 sf	100%	66	100%	66
AVERAGE OL FACTOR						53		133			68		

Wilkes-Barre VA (19.25) - Renovate 9th Floor Mental Health						
Classification (Description)		Plumbing Fixtures (IBC Table 2902.1)				
		STORY 01 - Bldg 17				
		TOTAL OL	OL (M)(F)	Lav (M)	Lav (F)	DF
Assembly (Auditoriums, Lecture Halls & Libraries)	A-3a	17	9	0.05	0.05	0.03
Business	B	43	22	0.55	0.55	0.43
TOTALS : Areas, Occupant Loads & Egress Widths		60	31			
TOTALS : WCs + LAVs + DFs				0.60	0.60	0.46
TOTALS (Required) : WCs + LAVs + DFs				1	1	1
TOTALS (Provided) : WCs + LAVs + DFs				3	3	0
TOTALS (Provided) : UNISEX				1		

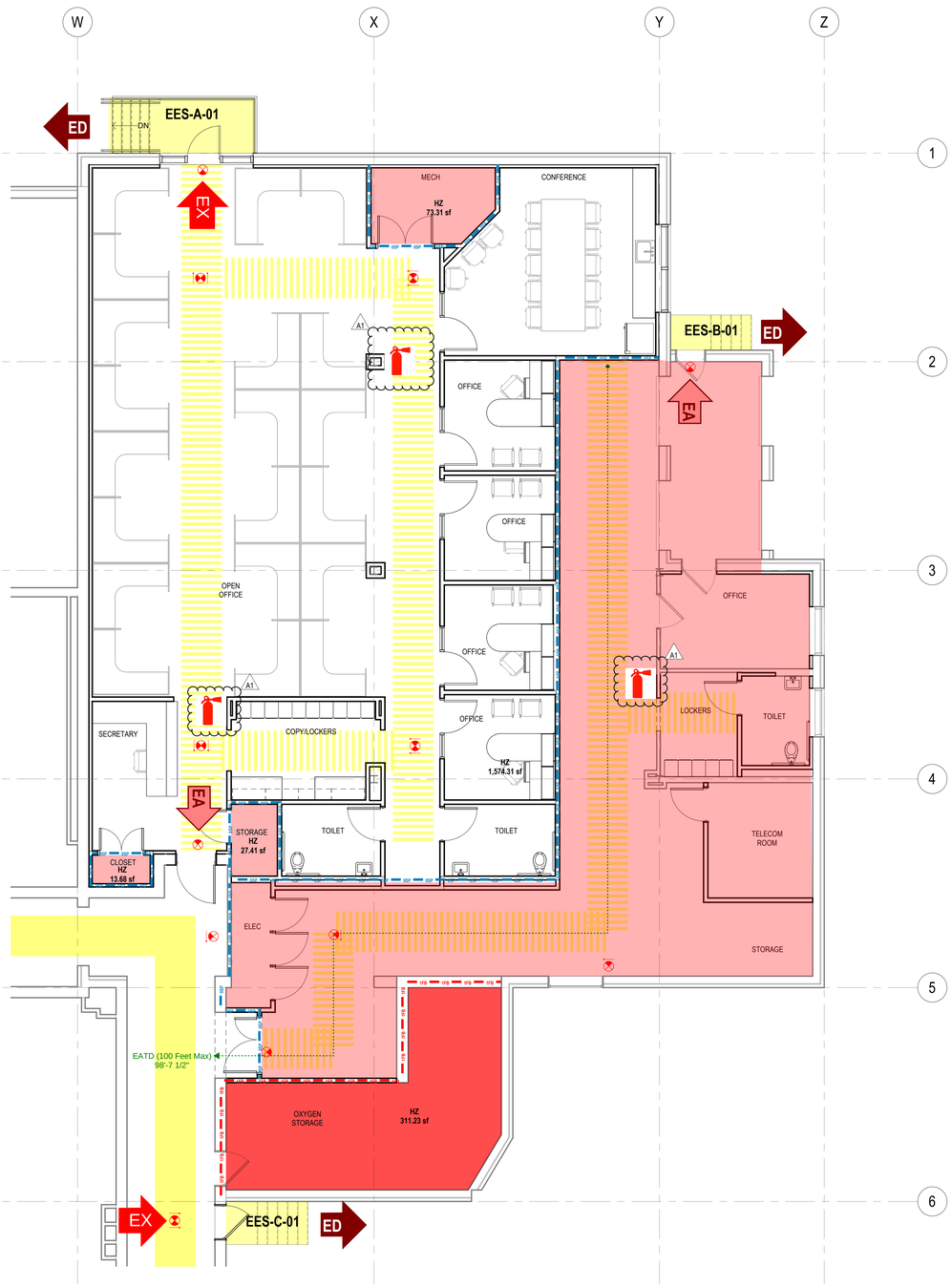

F4 WAREHOUSE FLOOR PLAN - LIFE SAFETY
3/16" = 1'-0"

LEGEND - LIFE SAFETY PLANS

Exits & Exit Discharge

- EX — Exit (EX)
- ED — Exit Discharge (ED)

Stairways

- IES — Interior Exit Stairway (IES)

Exit Access (EA)

- SC — Smoke Compartment (SC)
- EA — Exit Access (EA)
- Exit Access Corridor (EAC) - Patient
- Exit Access Corridor (EAC) - Staff
- Spaces open to the EAC
- HEALTH CARE SUITES
  PCS : Patient Care Sleeping Suites
  PCNS : Patient Care Nonsleeping Suites
  NPC : Non-Patient Care Suites

Travel Distances (Maximum) : New Health Care

- **Exit Access Travel Distance (EATD)**
  300 Feet (New Business / Existing Business)
- **Common Path of Egress Travel (CPOETD)**
  100 Feet (New Business / Existing Business)
  Boiler, Incinerator, Furnace Rooms [Mech Equip Room] : 50'
- **Dead End Corridors (DEC)**
  50 Feet (New Business / Existing Business)

Fire-Resistance Rated (FRR) Assemblies

- Fire Barriers
  2-Hour : 2FB
  1-Hour : 1FB
- Smoke Barriers
  1-Hour : 1SB
- Smoke Partitions
  0-Hour : 0SP
- Corridor Partitions
  Health Care Corridors & Suites (HCS)
  (Resists the Passage of Smoke ... Non-rated)
- Shaft Enclosures
  2-Hour : 2SE
- FB+SB Combination
  1-Hour : 1FSB

- VERTICAL OPENING (VO) - SHAFTS, HOISTWAYS
- HAZARDOUS AREA PROTECTION (HAZ)
- FIRE EXTINGUISHER CABINET (FEC)
- EXIT SIGNS

KEY PLAN

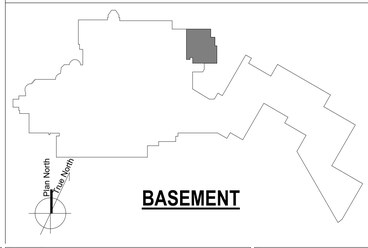

BASEMENT

Number:	Revisions:	Date:
0	100% CONSTRUCTION DOCUMENTS	04/18/2023
A1	ADDENDUM 1	06/28/2024

C:\Revit 2022\19.25_ARCH_R22_zmiller4KRTZ.rvt

CONSULTANTS:

ARCHITECT/ENGINEERS:

VALHALLA ENGINEERING GROUP, LLC
750 W HAMPDEN AVE
SUITE 300
ENGLEWOOD, CO 80110
(720) 550-6307
WWW.VALHALLAENGINEERING.COM
VEG 19.25

STAMP:

U.S. Department of Veterans Affairs

Drawing Title	Phase	Project Title	Project Number
LIFE SAFETY PLAN - WAREHOUSE	100% CONSTRUCTION DOCUMENTS	RENOVATE 9TH FLOOR MENTAL HEALTH	693-19-106
Approved: Project Director		Location: 1111 EAST END BLVD, WILKES-BARRE, PA 18711	Building Number: 17
		Issue Date: 04/18/2023 · Checked: DR · Drawn: ZAM	Drawing Number: 17-I11 DWG 10 of 10

FINAL DRAWINGS SUBMITTAL

VA FORM 08 - 6231

7/1/2024 10:30:54 AM

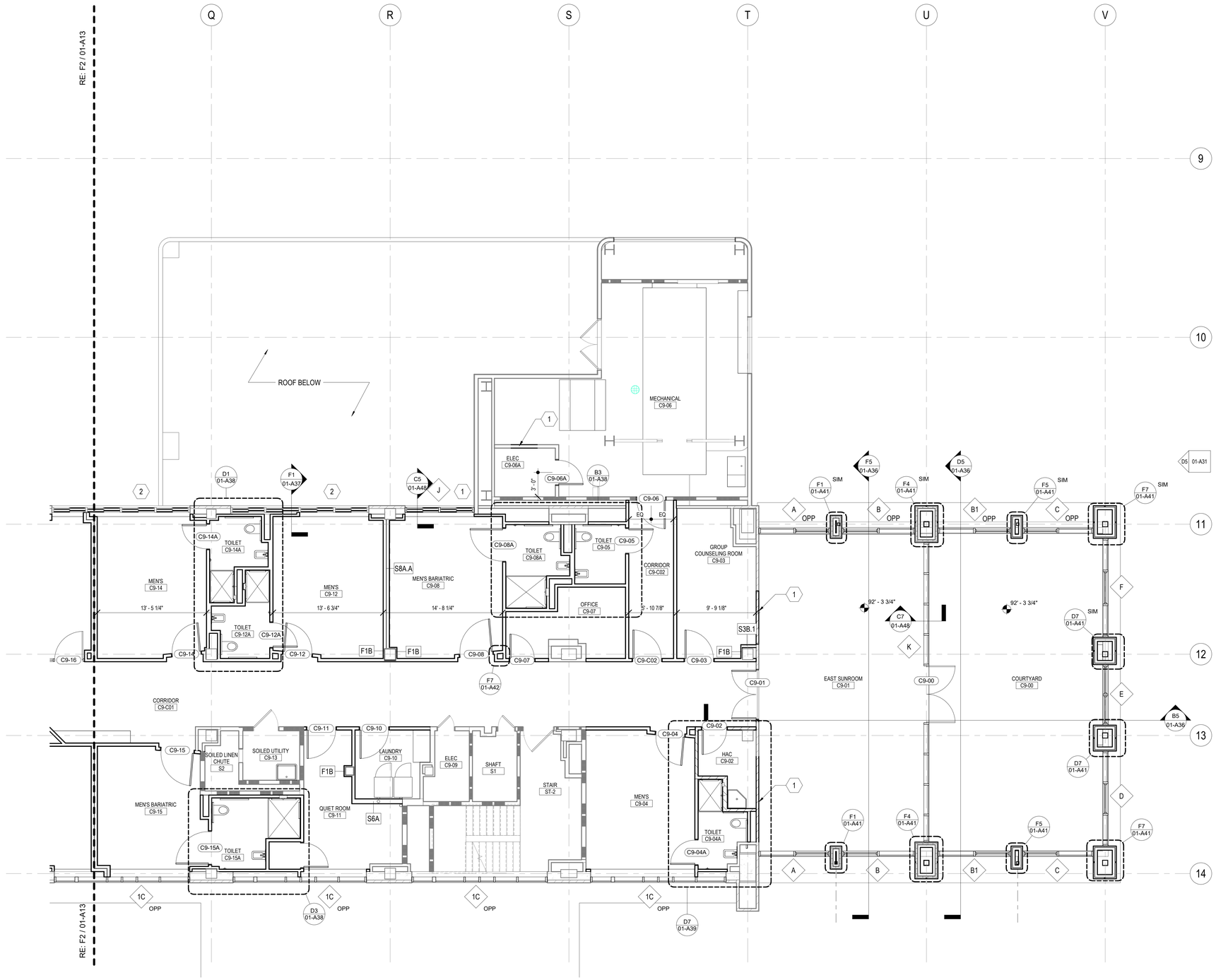

F1 9TH FLOOR PLAN - EAST
3/16" = 1'-0"

GENERAL NOTES

A. REFER TO 01-I3 FOR ADDITIONAL GENERAL NOTES THAT ARE APPLICABLE.

B. REFER TO LARGE SCALE PLANS FOR ADDITIONAL INFORMATION AND DIMENSIONS.

C. ALIGN NEW PARTITIONS WITH ADJACENT EXISTING PARTITIONS WHERE NEW PARTITION EXTENDS IN THE SAME DIRECTION.

D. ALIGN CENTER OR FINISH FACE OF PARTITION WITH CENTER OF WINDOW MULLION, UNLESS NOTED OTHERWISE.

E. PARTITIONS TO BE TYPE S3A, UNLESS NOTED OTHERWISE. FURRING ALONG EXTERIOR WALLS TO BE S2B.1, UNLESS NOTED OTHERWISE. REFER TO AE610 FOR PARTITION TYPE INFORMATION

F. REFER TO 01-A47 FOR WINDOW TYPES.

G. REFER TO 01-A40 FOR MILLWORK DETAILS.

H. REFER TO 01-A46 FOR DOOR SCHEDULE, DOOR & FRAME TYPES, AND FRAME DETAILS.

A1

KEYNOTES

00

1 INFILL OPENING TO MATCH ADJACENT CONSTRUCTION

2 NEW GLAZING IN EXISTING FRAME. MATCH LAYOUT TO EXISTING WINDOWS.

KEY PLAN

BLDG 01

Number:	Revisions:	Date:
0	100% CONSTRUCTION DOCUMENTS	04/18/2023
A1	ADDENDUM 1	06/28/2024

CONSULTANTS:

ARCHITECT/ENGINEERS:

VALHALLA ENGINEERING GROUP, LLC
750 W HAMPDEN AVE
SUITE 300
ENGLEWOOD, CO 80110
(720) 550-6307
WWW.VALHALLAENGINEERING.COM
VEG 19.25

STAMP:

U.S. Department of Veterans Affairs

Drawing Title	Phase	Project Title	Project Number
FLOOR PLAN - 9TH FLOOR - EAST	100% CONSTRUCTION DOCUMENTS	RENOVATE 9TH FLOOR MENTAL HEALTH	693-19-106
Approved: Project Director		Location: 1111 EAST END BLVD, WILKES-BARRE, PA 18711	Building Number: 01
		Issue Date: 04/18/2023 · Checked: DR · Drawn: ZAM	Drawing Number: 01-A14 DWG 14 of 53

FINAL DRAWINGS SUBMITTAL

C:\Revit 2022\19.25_ARCH_R22_zmillerNWTZ.rvt

7/1/2024 10:30:16 AM

VA FORM 08 - 6231

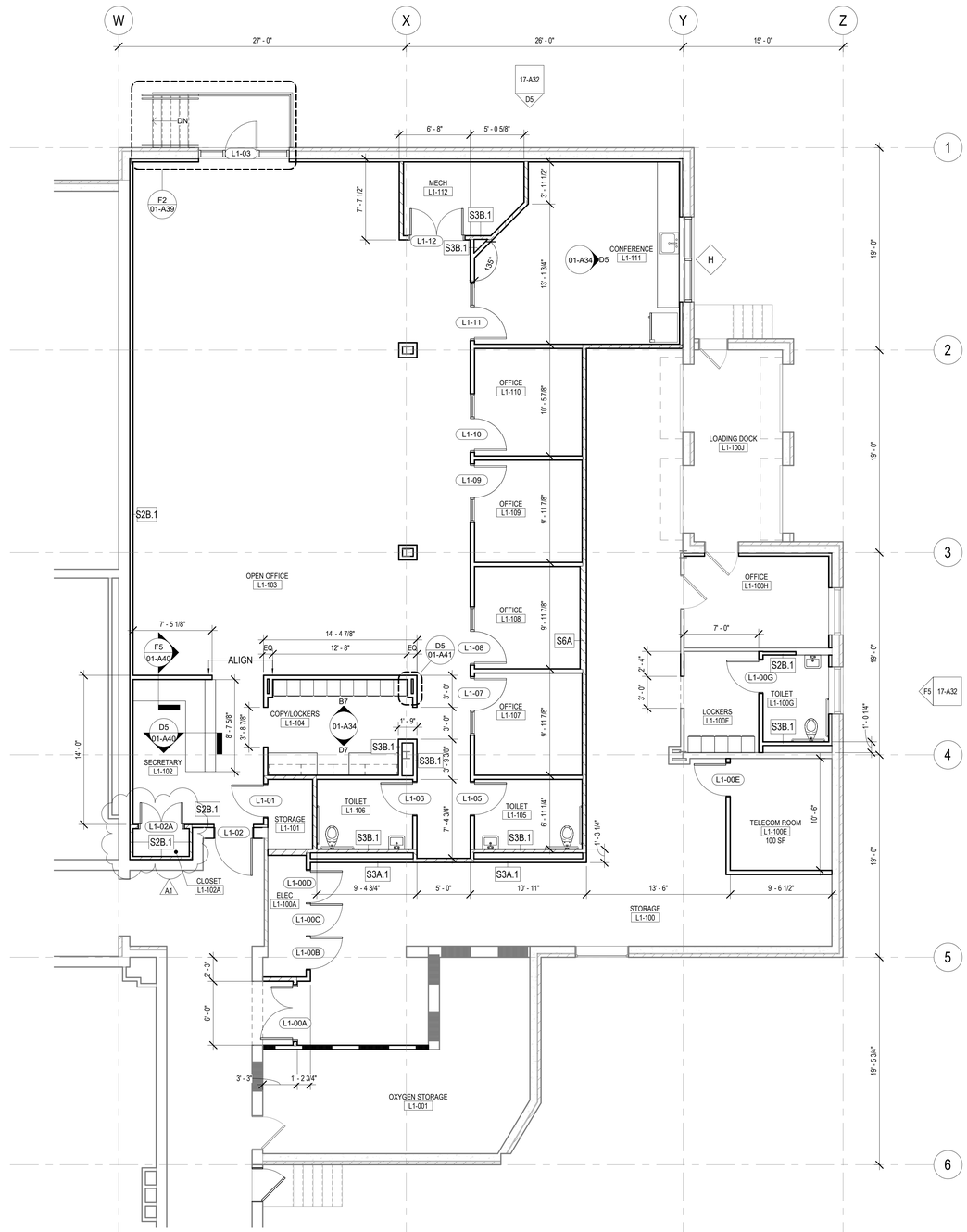

F4 WAREHOUSE FLOOR PLAN
3/16" = 1'-0"

GENERAL NOTES

A. REFER TO SHEET 01-I3 FOR ADDITIONAL GENERAL NOTES THAT ARE APPLICABLE.

B. REFER TO ENLARGED FLOOR PLANS FOR ADDITIONAL INFORMATION AND DIMENSIONS.

C. ALIGN NEW PARTITIONS WITH ADJACENT EXISTING PARTITIONS WHERE NEW PARTITION EXTENDS IN THE SAME DIRECTION.

D. ALIGN CENTER OR FINISH FACE OF PARTITION WITH CENTER OF WINDOW MULLION, UNLESS NOTED OTHERWISE.

E. PARTITIONS TO BE TYPE S3B, UNLESS NOTED OTHERWISE. FURRING ALONG EXTERIOR WALLS TO BE S2B.1, UNLESS NOTED OTHERWISE.

F. REFER TO WINDOW TYPES FOR DIMENSIONS AND ADDITIONAL INFORMATION.

KEY PLAN

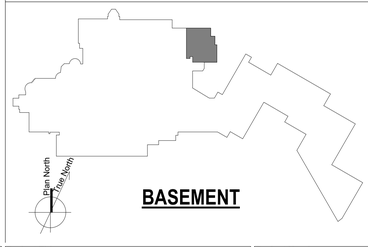

BASEMENT

Number:	Revisions:	Date:
0	100% CONSTRUCTION DOCUMENTS	04/18/2023
A1	ADDENDUM 1	06/28/2024

CONSULTANTS:

ARCHITECT/ENGINEERS:

VALHALLA ENGINEERING GROUP, LLC
750 W HAMPDEN AVE
SUITE 300
ENGLEWOOD, CO 80110
(720) 550-6307
WWW.VALHALLAENGINEERING.COM
VEG 19.25

STAMP:

U.S. Department of Veterans Affairs

Drawing Title: FLOOR PLAN - WAREHOUSE

Phase: 100% CONSTRUCTION DOCUMENTS

Approved: Project Director

Project Title: RENOVATE 9TH FLOOR MENTAL HEALTH

Project Number: 693-19-106

Building Number: 17

Location: 1111 EAST END BLVD, WILKES-BARRE, PA 18711

Drawing Number: 17-A15

Issue Date: 04/18/2023 | Checked: DR | Drawn: ZAM

DWG 15 of 53

FINAL DRAWINGS SUBMITTAL

VA FORM 08 - 6231

C:\Revit 2022\19.25_ARCH_R22_zmillerHNRTZ.rvt

7/11/2024 10:33:51 AM

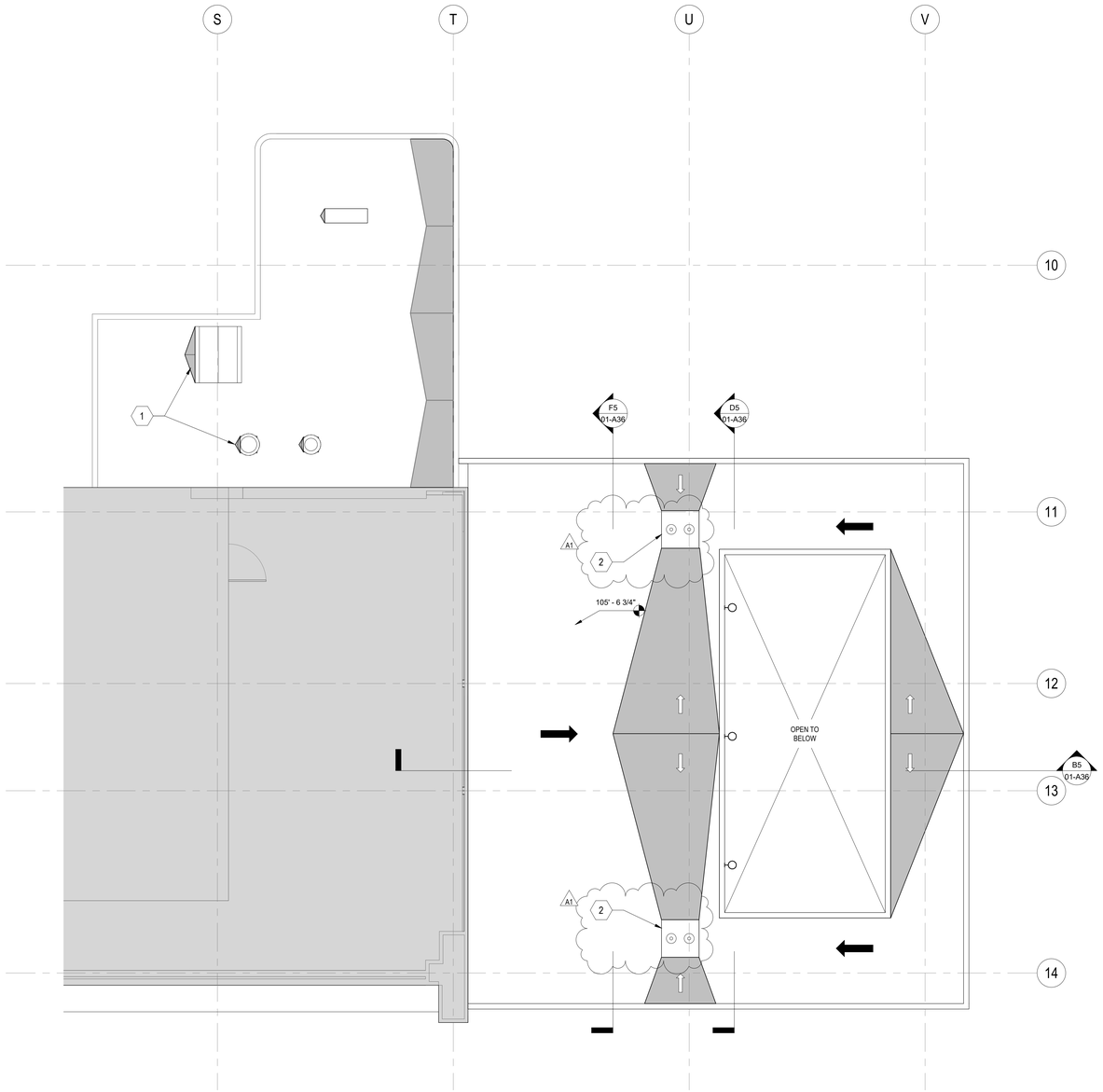

F4 9TH FLOOR ROOF PLAN
3/16" = 1'-0"

GENERAL NOTES

A. REFER TO STRUCTURAL, MECHANICAL, PLUMBING AND ELECTRICAL DRAWINGS FOR MORE INFORMATION.

B. REFER TO SHEET 01-I3 FOR ADDITIONAL GENERAL NOTES THAT ARE APPLICABLE.

C. PROVIDE 1/2"/FT. TAPERED INSULATION AT ROOF CURBS AND AT EQUIPMENT WHICH EXCEEDS 18 INCHES IN WIDTH.

KEYNOTES

00

1 PROVIDE ROOF CRICKET FOR NEW ROOFTOP MECHANICAL EQUIPMENT, TYP

2 ROOF DRAIN TO TIE INTO EXISTING SYSTEM PER MECHANICAL

ROOF LEGEND

TPO ROOF OVER SLOPED INSUALTION (1/8" PER FOOT MIN)

TPO ROOF OVER SLOPED INSUALTION (1/4" PER FOOT MIN)

KEY PLAN

BLDG 01

Number:	Revisions:	Date:
0	100% CONSTRUCTION DOCUMENTS	04/18/2023
A1	ADDENDUM 1	06/28/2024

CONSULTANTS:

ARCHITECT/ENGINEERS:

VALHALLA ENGINEERING GROUP, LLC
750 W HAMPDEN AVE
SUITE 300
ENGLEWOOD, CO 80110
(720) 550-6307
WWW.VALHALLAENGINEERING.COM

VEG 19.25

STAMP:

U.S. Department of Veterans Affairs

Drawing Title	ROOF PLAN - 9TH FLOOR
Phase	100% CONSTRUCTION DOCUMENTS
Approved: Project Director	
Project Title	RENOVATE 9TH FLOOR MENTAL HEALTH
Project Number	693-19-106
Building Number	01
Location	1111 EAST END BLVD, WILKES-BARRE, PA 18711
Drawing Number	01-A22
Issue Date	04/18/2023
Checked	DR
Drawn	ZAM
	DWG 22 of 53

FINAL DRAWINGS SUBMITTAL

VA FORM 08 - 6231

C:\Revit 2022\19.25_ARCH_FK22_zmillerHKRTZ.rvt

7/1/2024 10:30:17 AM

F1 9TH FLOOR FINISH PLAN - EAST
3/16" = 1'-0"

GENERAL NOTES

A. REFER TO SHEET 01-I3 FOR ADDITIONAL GENERAL NOTES THAT ARE APPLICABLE.

B. REFER TO FINISH SCHEDULE FOR MORE INFORMATION.

C. ALIGN ALL WALL TILE JOINTS WITH FLOOR TILE JOINTS, UNLESS NOTED OTHERWISE

D. FLOOR FINISH MATERIAL AND/OR PATTERN SHALL BE INSTALLED UNDER TOE KICKS OF CASEWORK/MILLWORK, UNDER OPEN COUNTERTOPS, AND UNDER EQUIPMENT.

E. FLOOR MATERIAL/COLOR TRANSITIONS TO ALIGN WITH ROOM SIDE OF DOOR STOP, UNLESS NOTED OR SHOWN OTHERWISE.

F. INSTALL TRANSITION STRIPS AT ALL FLOOR FINISH MATERIAL CHANGES, UNLESS NOTED OTHERWISE.

G. END CAP GUARDS ARE TO ALL BE ECG-1, UNLESS NOTED OTHERWISE.

FINISH LEGEND

- WSF-1 (DARK)
- WSF-2 (LIGHT)
- HSF-1
- LVT-1
- RES-6A
- PT-1
- PT-2
- PVR-1
- TRF-1

KEY PLAN

BLDG 01

Number:	Revisions:	Date:
0	100% CONSTRUCTION DOCUMENTS	04/18/2023
A1	ADDENDUM 1	06/28/2024

CONSULTANTS:

ARCHITECT/ENGINEERS:

VALHALLA ENGINEERING GROUP, LLC
750 W HAMPDEN AVE
SUITE 300
ENGLEWOOD, CO 80110
(720) 559-6307
WWW.VALHALLAENGINEERING.COM
VEG 19.25

STAMP:

U.S. Department of Veterans Affairs

Drawing Title: FINISH PLAN - 9TH FLOOR - EAST

Phase: 100% CONSTRUCTION DOCUMENTS

Approved: Project Director

Project Title: RENOVATE 9TH FLOOR MENTAL HEALTH

Project Number: 693-19-106

Building Number: 01

Location: 1111 EAST END BLVD, WILKES-BARRE, PA 18711

Drawing Number: 01-A27

Issue Date: 04/18/2023 | Checked: DR | Drawn: ZAM

DWG 27 of 53

FINAL DRAWINGS SUBMITTAL

C:\Revit 2022\19-25_ARCH_R22_smithers\NRTZ.rvt

7/1/2024 10:30:18 AM

VA FORM 08 - 6231

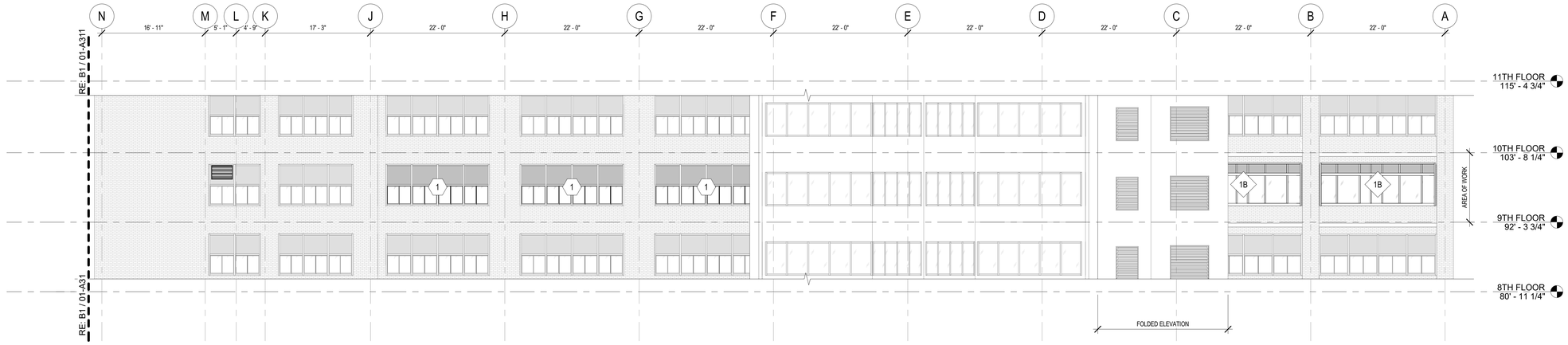

B1 NORTH ELEVATION - WEST
1/8" = 1'-0"

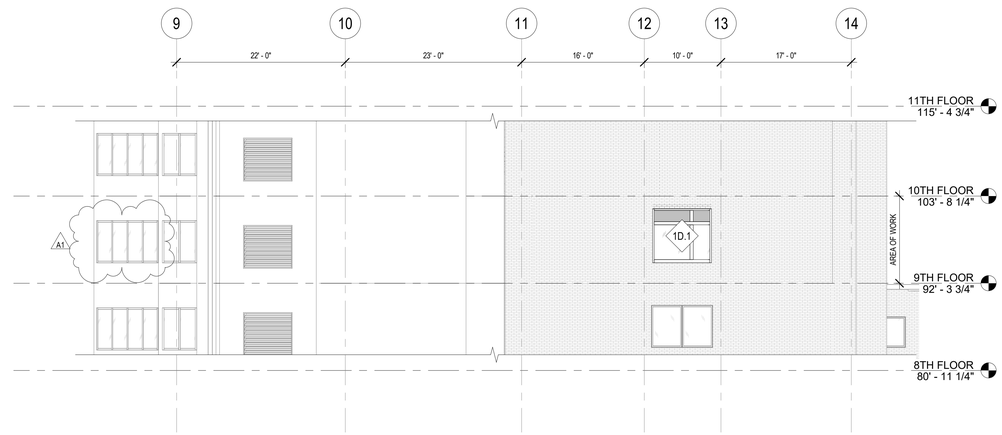

D5 WEST ELEVATION
1/8" = 1'-0"

F1 SOUTH ELEVATION - WEST
1/8" = 1'-0"

GENERAL NOTES

A. REFER TO SHEET 01-I3 AND 01-A1 FOR ADDITIONAL GENERAL NOTES THAT ARE APPLICABLE.

B. EXTERIOR WINDOW PROFILES FOR SOUTH AND WEST ELEVATIONS ARE REPRESENTATIVE OF INFORMATION FROM DRAWINGS PROVIDED TO VALHALLA FROM VHA COR ON 02/10/2020 FROM VHA PROJECT #693-13-111. WINDOW SIZES HAVE BEEN MODIFIED TO MATCH EXISTING OPENINGS AS UNDERSTOOD BY VALHALLA AND ARE TO BE VERIFIED IN FIELD.

C. REFER TO WINDOW TYPES FOR DIMENSIONS AND ADDITIONAL INFORMATION.

KEYNOTES

00

1 INSTALL NEW LAMINATED GLAZING AND SPANDREL PANELS IN EXISTING WINDOW FRAME TO MATCH EXISTING LAYOUT. WINDOWS TO HAVE INTEGRAL BLINDS BETWEEN LAYERS OF GLAZING.

EXTERIOR ELEVATION LEGEND

NEW LINE TYPE

EXISTING LINE TYPE

Number:	Revisions:	Date:
0	100% CONSTRUCTION DOCUMENTS	04/18/2023
A1	ADDENDUM 1	06/28/2024

CONSULTANTS:

ARCHITECT/ENGINEERS:

VALHALLA ENGINEERING GROUP, LLC
750 W HAMPDEN AVE
SUITE 300
ENGLEWOOD, CO 80110
(720) 559-6307
WWW.VALHALLAENGINEERING.COM
VEG 19.25

STAMP:

U.S. Department of Veterans Affairs

Drawing Title: EXTERIOR ELEVATIONS

Phase: 100% CONSTRUCTION DOCUMENTS

Approved: Project Director

Project Title: RENOVATE 9TH FLOOR MENTAL HEALTH

Project Number: 693-19-106

Building Number: 01

Location: 1111 EAST END BLVD, WILKES-BARRE, PA 18711

Drawing Number: 01-A30

Issue Date: 04/18/2023 | Checked: DR | Drawn: ZAM

DWG 30 of 53

FINAL DRAWINGS SUBMITTAL

C:\Revit 2022\19.25_ARCH_R22_smithers\NRTZ.rvt

7/1/2024 10:50:22 AM

VA FORM 08 - 6231

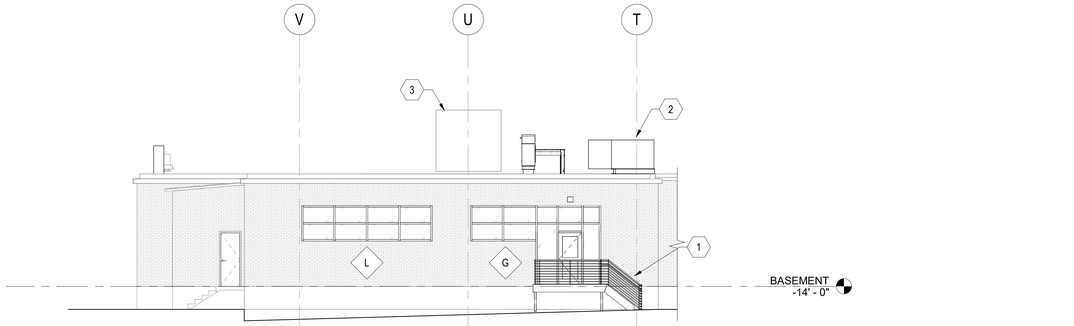

D5 NORTH WAREHOUSE ELEVATION
1/8" = 1'-0"

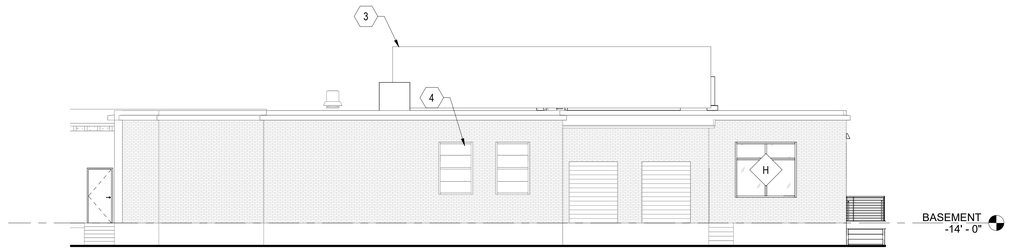

F5 EAST WAREHOUSE ELEVATION
1/8" = 1'-0"

GENERAL NOTES

A. REFER TO SHEET 01-I3 FOR ADDITIONAL GENERAL NOTES THAT ARE APPLICABLE.

B. REFER TO WINDOW TYPES FOR DIMENSIONS AND ADDITIONAL INFORMATION.

KEYNOTES

00

1 STEEL STAIR, GUARD AND HANDRAIL

2 NEW AIR HANDLING UNIT; RE MECHANICAL

3 EXISTING AIR HANDLING UNIT

4 INSTALL WINDOW PANE IN DEMOLISHED EXHAUST FAN OPENING. MATCH EXISTING WINDOW DESIGN AND GLAZING TYPE

EXTERIOR ELEVATION LEGEND

NEW LINE TYPE

EXISTING LINE TYPE

Number:	Revisions:	Date:
0	100% CONSTRUCTION DOCUMENTS	04/18/2023

CONSULTANTS:

ARCHITECT/ENGINEERS:

VALHALLA ENGINEERING GROUP, LLC
750 W HAMPDEN AVE
SUITE 300
ENGLEWOOD, CO 80110
(720) 550-6307
WWW.VALHALLAENGINEERING.COM
VEG 19.25

STAMP:

U.S. Department of Veterans Affairs

Drawing Title: EXTERIOR ELEVATIONS

Phase: 100% CONSTRUCTION DOCUMENTS

Approved: Project Director

Project Title: RENOVATE 9TH FLOOR MENTAL HEALTH

Location: 1111 EAST END BLVD, WILKES-BARRE, PA 18711

Issue Date: 04/18/2023 | Checked: DR | Drawn: ZAM

Project Number: 693-19-106

Building Number: 17

Drawing Number: 17-A32

DWG 32 of 53

FINAL DRAWINGS SUBMITTAL

VA FORM 08 - 6231

C:\Revit 2022\19-25_ARCH_R22_smilleri\NRTZ.rvt

7/1/2024 10:33:53 AM

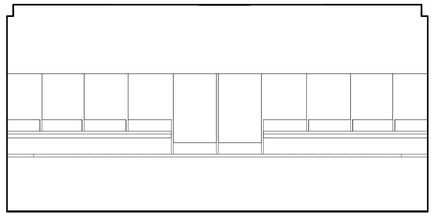

B2 C9-27 - NORTH ELEVATION
3/8" = 1'-0"

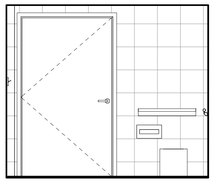

B5 C9-15A - WEST ELEVATION
3/8" = 1'-0"

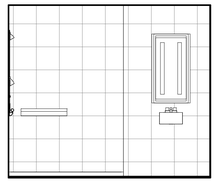

B7 C9-15A - EAST ELEVATION
3/8" = 1'-0"

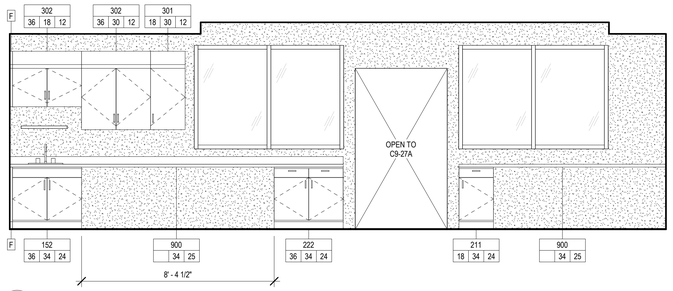

C2 C9-27 - SOUTH ELEVATION
3/8" = 1'-0"

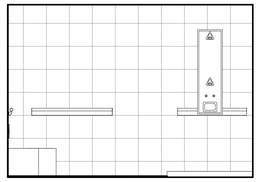

C5 C9-15A - NORTH ELEVATION
3/8" = 1'-0"

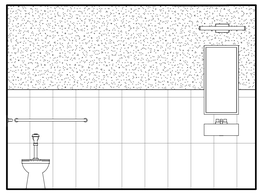

C7 C9-33 - WEST ELEVATION
3/8" = 1'-0"

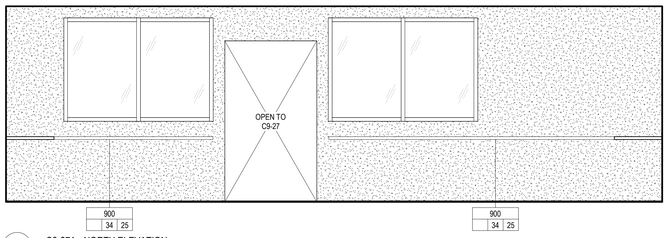

E2 C9-27A - NORTH ELEVATION
3/8" = 1'-0"

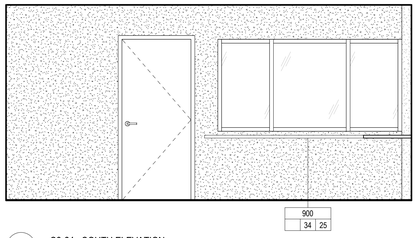

E5 C9-64 - SOUTH ELEVATION
3/8" = 1'-0"

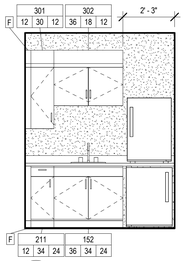

E7 C9-65 - WEST ELEVATION
3/8" = 1'-0"

F2 C9-42 - SOUTH ELEVATION
3/8" = 1'-0"

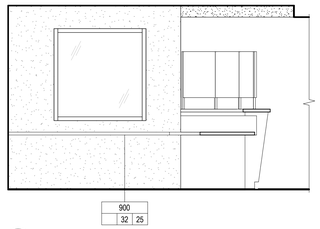

F5 C9-64 - EAST ELEVATION
3/8" = 1'-0"

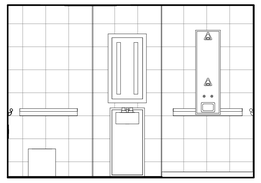

F7 C9-68A - EAST ELEVATION
3/8" = 1'-0"

GENERAL NOTES

A. REFER TO 01-I3 FOR ADDITIONAL GENERAL NOTES THAT ARE APPLICABLE.

B. REFER TO 01-I4 ACCESSIBILITY GUIDELINES FOR MOUNTING HEIGHTS OF FIXTURES AND ACCESSORIES

C. REFER TO 01-A40 FOR MILLWORK DETAILS

D. REFER TO 01-A46 FOR DOOR SCHEDULE, DOOR & FRAME TYPES, AND FRAME DETAILS

E. REFER TO 01-A47 FOR WINDOW TYPES

F. REFER TO 01-A50 FOR FINISH SCHEDULE AND LEGEND.

KEYNOTES

00

A1

FINISH LEGEND

SCHEDULED PNT

PT-2/PT-3
PER DETAIL ON 01-A49

SCHEDULED RWC

WP-1

Number:	Revisions:	Date:
0	100% CONSTRUCTION DOCUMENTS	04/18/2023
A1	ADDENDUM 1	06/28/2024

CONSULTANTS:

ARCHITECT/ENGINEERS:

VALHALLA ENGINEERING GROUP, LLC
750 W HAMPDEN AVE
SUITE 300
ENGLEWOOD, CO 80110
(720) 559-6307
WWW.VALHALLAENGINEERING.COM
VEG 19.25

STAMP:

U.S. Department of Veterans Affairs

Drawing Title: INTERIOR ELEVATIONS

Phase: 100% CONSTRUCTION DOCUMENTS

Approved: Project Director

Project Title: RENOVATE 9TH FLOOR MENTAL HEALTH

Location: 1111 EAST END BLVD, WILKES-BARRE, PA 18711

Issue Date: 04/18/2023 | Checked: DR | Drawn: ZAM

Project Number: 693-19-106

Building Number: 01

Drawing Number: 01-A33

DWG 33 of 53

FINAL DRAWINGS SUBMITTAL

VA FORM 08 - 6231

C:\Revit 2022\19-25_ARCH_R22_smilleri\NRTZ.rvt

7/1/2024 10:32:26 AM

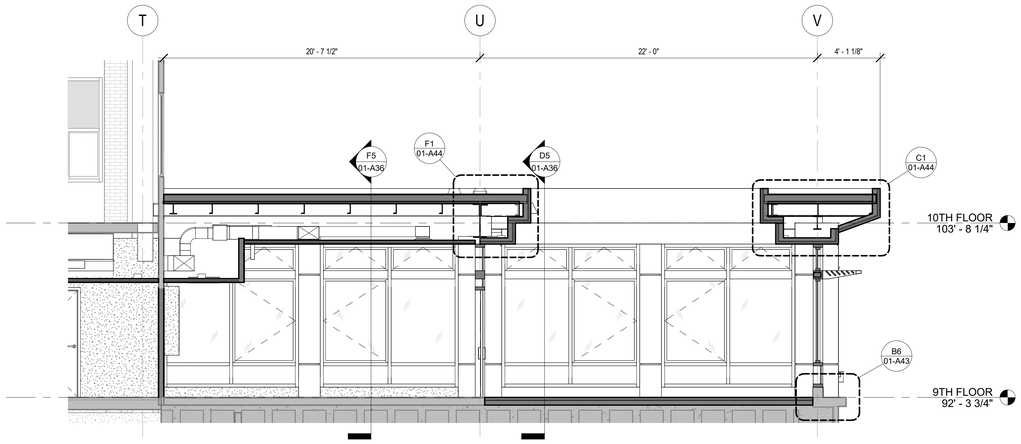

B5 BUILDING SECTION 1 @ EAST SUNROOM
1/4" = 1'-0"

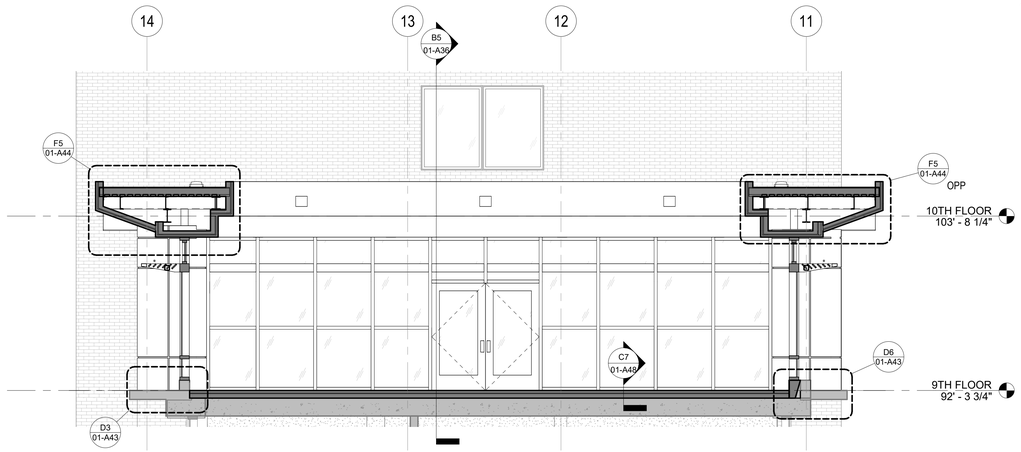

D5 BUILDING SECTION 2 @ COURTYARD
1/4" = 1'-0"

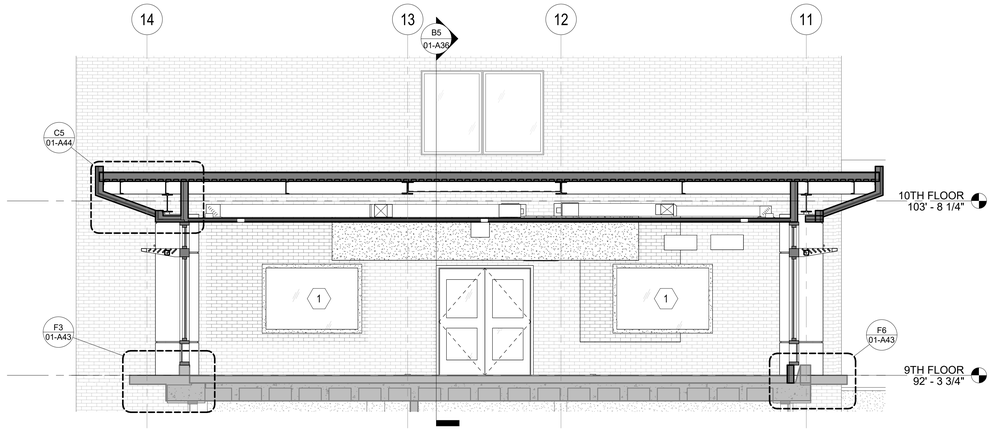

F5 BUILDING SECTION 2 @ EAST SUNROOM
1/4" = 1'-0"

GENERAL NOTES

A. REFER TO STRUCTURAL, MECHANICAL, PLUMBING AND ELECTRICAL DRAWINGS FOR MORE INFORMATION.

B. REFER TO SHEET 01-I3 FOR ADDITIONAL GENERAL NOTES THAT ARE APPLICABLE.

C. REFER TO WALL TYPES SCHEDULE SHEET FOR MORE INFORMATION REGARDING INTERIOR WALL CONSTRUCTION.

A1

KEYNOTES

00

1 WALL MOUNTED, LIGATURE RESISTANT TELEVISION ENCLOSURE

Number:	Revisions:	Date:
0	100% CONSTRUCTION DOCUMENTS	04/18/2023
A1	ADDENDUM 1	06/28/2024

CONSULTANTS:

ARCHITECT/ENGINEERS:

VALHALLA ENGINEERING GROUP, LLC
750 W HAMPDEN AVE
SUITE 300
ENGLEWOOD, CO 80110
(720) 550-6307
WWW.VALHALLAENGINEERING.COM
VEG 19.25

STAMP:

U.S. Department of Veterans Affairs

Drawing Title: BUILDING SECTIONS

Phase: 100% CONSTRUCTION DOCUMENTS

Approved: Project Director

Project Title: RENOVATE 9TH FLOOR MENTAL HEALTH

Location: 1111 EAST END BLVD, WILKES-BARRE, PA 18711

Issue Date: 04/18/2023 | Checked: DR | Drawn: ZAM

Project Number: 693-19-106

Building Number: 01

Drawing Number: 01-A36

DWG 36 of 53

FINAL DRAWINGS SUBMITTAL

VA FORM 08 - 6231

C:\Revit 2022\19.25_ARCH_R22_zmillerHRITZ.rvt

7/1/2024 10:30:29 AM

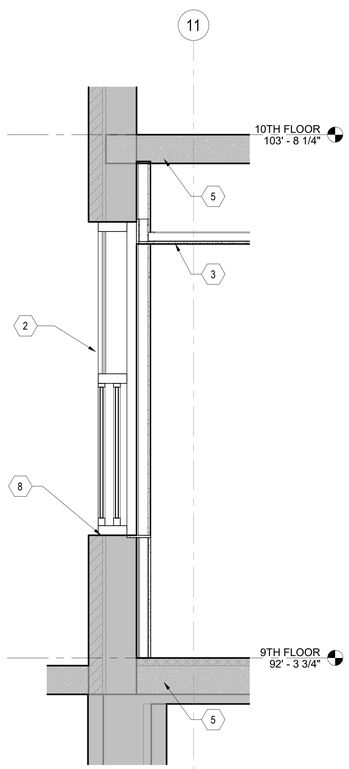

F1 SECTION AT MEN'S PATIENT ROOM C9-13 - NORTH WALL
3/4" = 1'-0"

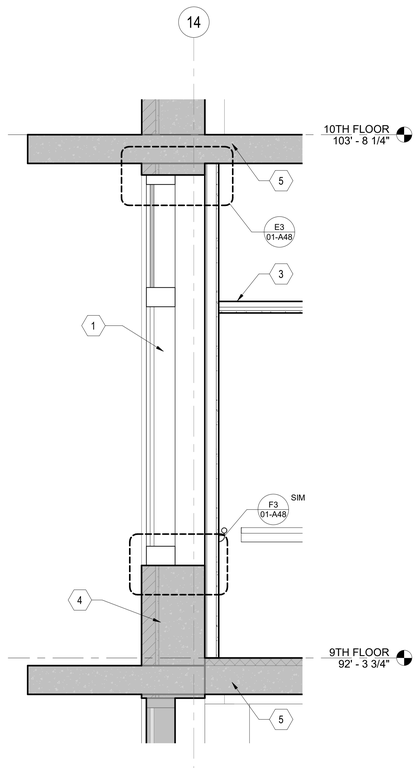

F3 SECTION AT PATIENT TOILET ROOM C9-23A - SOUTH WALL
3/4" = 1'-0"

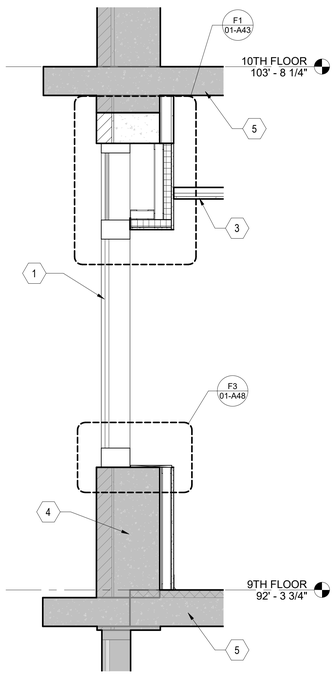

F4 SECTION AT DAY/TV - SOUTH WALL
3/4" = 1'-0"

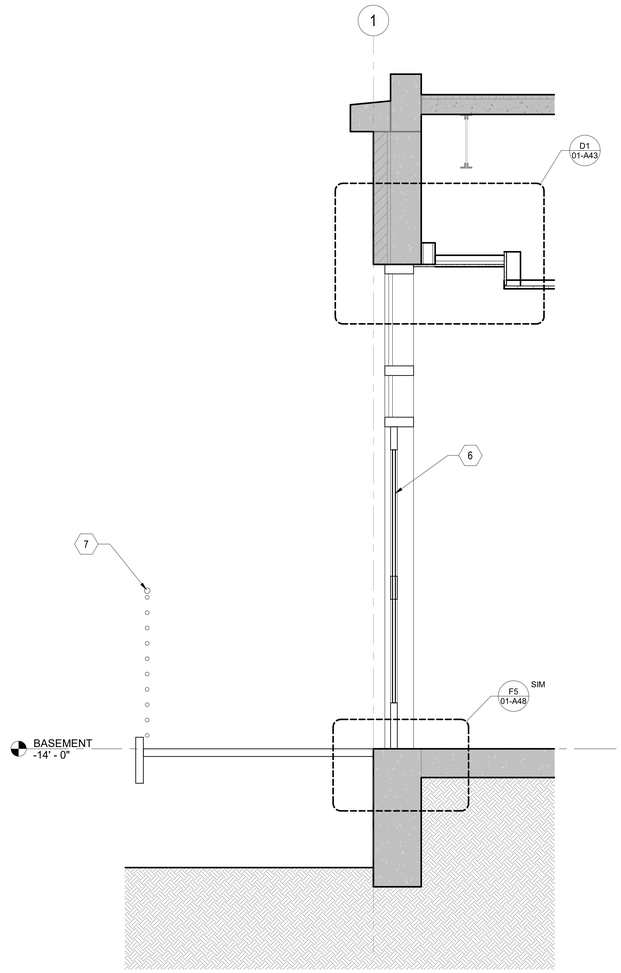

F6 SECTION AT NEW WAREHOUSE STOREFRONT ENTRY
3/4" = 1'-0"

GENERAL NOTES

A. REFER TO STRUCTURAL, MECHANICAL, PLUMBING AND ELECTRICAL DRAWINGS FOR MORE INFORMATION.

B. REFER TO SHEET 01-I3 FOR ADDITIONAL GENERAL NOTES THAT ARE APPLICABLE.

C. REFER TO WALL TYPES SCHEDULE SHEET FOR MORE INFORMATION REGARDING INTERIOR WALL CONSTRUCTION.

A1

KEYNOTES

00

1 NEW WINDOW SYSTEM. WINDOWS TO HAVE INTEGRAL BLINDS BETWEEN LAYERS OF GLAZING AND INTERIOR LAYER SHALL BE LAMINATED GLASS

2 NEW LAMINATED GLAZING IN EXISTING WINDOW FRAME. WINDOWS TO HAVE INTEGRAL BLINDS BETWEEN LAYERS OF GLAZING.

3 SCHEDULED CEILING, RE: REFLECTED CEILING PLAN

4 EXISTING EXTERIOR CONCRETE WALL (R-VALUE = 1)

5 EXISTING CONCRETE FLOOR STRUCTURE

6 NEW STOREFRONT SYSTEM AND DOOR TO ALIGN WITH EXISTING WINDOWS AND MULLIONS

7 STEEL GUARD

8 EXISTING EXTERIOR MASONRY WALL (R-VALUE = 2.38)

Number:	Revisions:	Date:
0	100% CONSTRUCTION DOCUMENTS	04/18/2023
A1	ADDENDUM 1	06/28/2024

CONSULTANTS:

ARCHITECT/ENGINEERS:

VALHALLA ENGINEERING GROUP, LLC
750 W HAMPDEN AVE
SUITE 300
ENGLEWOOD, CO 80110
(720) 550-6307
WWW.VALHALLAENGINEERING.COM
VEG 19.25

STAMP:

U.S. Department of Veterans Affairs

Drawing Title: WALL SECTIONS

Phase: 100% CONSTRUCTION DOCUMENTS

Project Title: RENOVATE 9TH FLOOR MENTAL HEALTH

Project Number: 693-19-106

Building Number: 01 & 17

Approved: Project Director

Location: 1111 EAST END BLVD, WILKES-BARRE, PA 18711

Issue Date: 04/18/2023 | Checked: DR | Drawn: ZAM

Drawing Number: 01-A37

DWG 37 of 53

FINAL DRAWINGS SUBMITTAL

VA FORM 08 - 6231

C:\Revit 2022\19 25_ARCH_R22_zmillerHRTZ.rvt

7/17/2024 10:30:39 AM

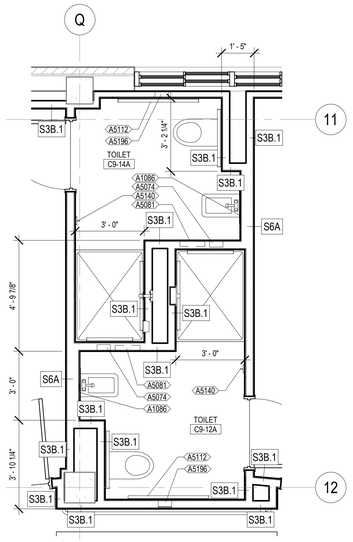

D1 ENLARGED RESTROOM PLAN - C9-12A AND C9-14A
3/8" = 1'-0"

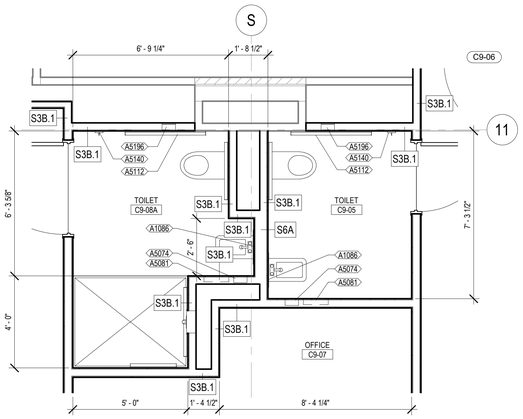

B3 ENLARGED RESTROOM PLAN - C9-05 AND C9-08A
3/8" = 1'-0"

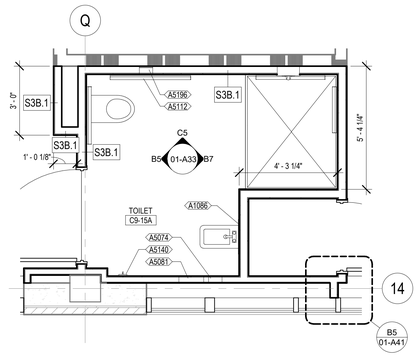

D3 ENLARGED RESTROOM PLAN - C9-15A
3/8" = 1'-0"

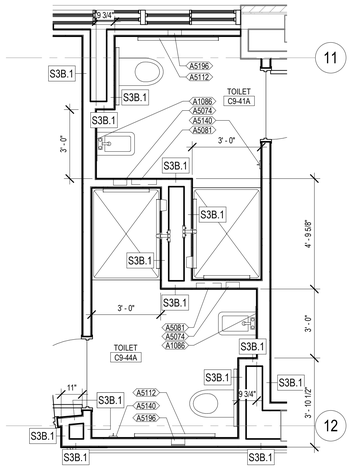

D5 ENLARGED RESTROOM PLAN - C9-41A AND C9-44A
3/8" = 1'-0"

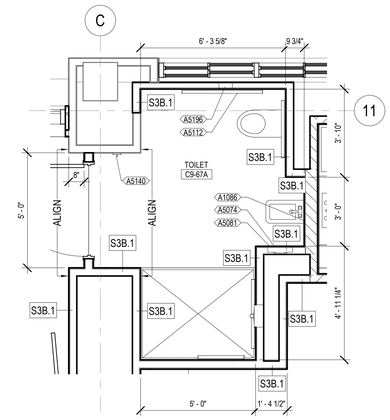

B7 ENLARGED RESTROOM PLAN - C9-67A
3/8" = 1'-0"

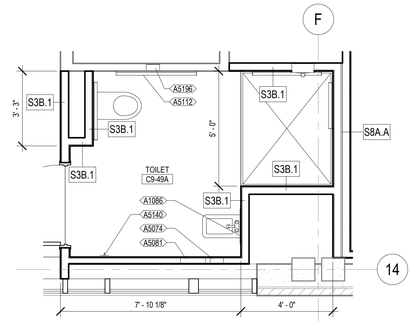

D7 ENLARGED RESTROOM PLAN - C9-49A
3/8" = 1'-0"

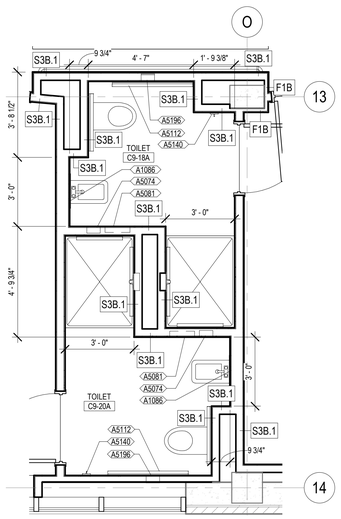

F1 ENLARGED RESTROOM PLAN - C9-18A AND C9-20A
3/8" = 1'-0"

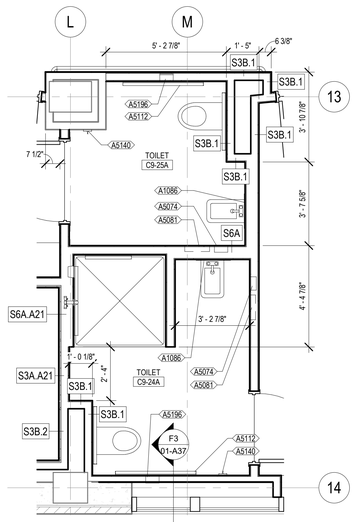

F3 ENLARGED RESTROOM PLAN - C9-24A AND C9-25A
3/8" = 1'-0"

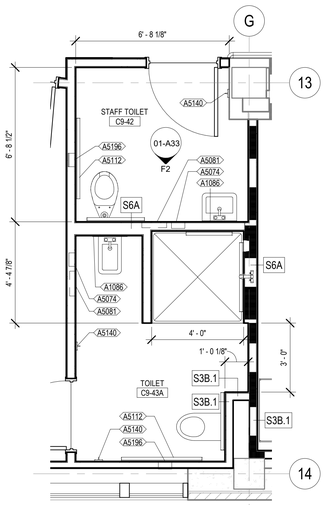

F5 ENLARGED RESTROOM PLAN - C9-42 AND C9-43A
3/8" = 1'-0"

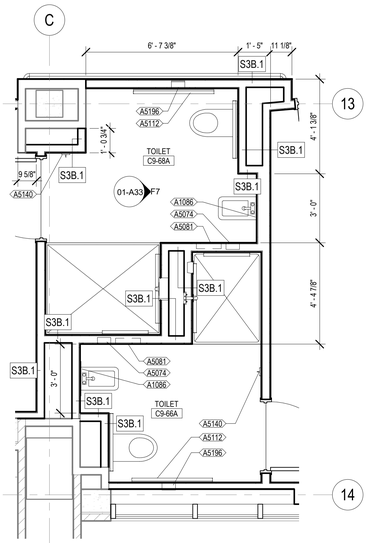

F7 ENLARGED RESTROOM PLAN - C9-66A AND C9-68A
3/8" = 1'-0"

GENERAL NOTES

A. REFER TO STRUCTURAL, MECHANICAL, PLUMBING AND ELECTRICAL DRAWINGS FOR MORE INFORMATION.

B. REFER TO SHEET 01-I3 FOR ADDITIONAL GENERAL NOTES THAT ARE APPLICABLE.

C. REFER TO SHEET 01-I4 ACCESSIBILITY GUIDELINES FOR MOUNTING HEIGHTS OF FIXTURES AND ACCESSORIES.

D. ALIGN NEW WALLS WITH ADJACENT EXISTING WALLS WHERE NEW WALL EXTENDS IN THE SAME DIRECTION.

E. ALIGN CENTER OF DEMISING WALLS OR FINISH FACE OF CHASE WALLS WITH CENTER OF WINDOW MULLION, UNLESS NOTED OTHERWISE.

F. PARTITIONS TO BE TYPE S3A, UNLESS NOTED OTHERWISE. FURRING ALONG EXTERIOR WALLS TO BE S2B.1, UNLESS NOTED OTHERWISE.

G. REFER TO WINDOW TYPES FOR DIMENSIONS AND ADDITIONAL INFORMATION.

A1

TOILET ROOM ACCESSORY SCHEDULE

JSN	DESCRIPTION	REMARKS
A5196	DISPENSER, TOILET TISSUE, PSYCHIATRIC	
A1086	MIRROR, SAFETY, PSYCHIATRIC	
A5081	DISPENSER, PAPER TOWEL, PSYCHIATRIC	
A5074	SOAP DISH, RECESSED, SS, PSYCHIATRIC	
A5109	GRAB BAR, 1-1/4" DIA, SS, 2 WALL, W/C ACCESSIBLE	
A5140	HOOK, GARMENT, SECURITY	

Number:	Revisions:	Date:
0	100% CONSTRUCTION DOCUMENTS	04/18/2023
A1	ADDENDUM 1	06/28/2024

CONSULTANTS:

ARCHITECT/ENGINEERS:

VALHALLA ENGINEERING GROUP, LLC
750 W HAMPDEN AVE
SUITE 300
ENGLEWOOD, CO 80110
(720) 550-6307
WWW.VALHALLAENGINEERING.COM
VEG 19.25

STAMP:

U.S. Department of Veterans Affairs

Drawing Title: ENLARGED FLOOR PLANS

Approved: Project Director

Phase: 100% CONSTRUCTION DOCUMENTS

Project Title: RENOVATE 9TH FLOOR MENTAL HEALTH

Location: 1111 EAST END BLVD, WILKES-BARRE, PA 18711

Project Number: 693-19-106

Building Number: 01

Drawing Number: 01-A38

Issue Date: 04/18/2023 | Checked: DR | Drawn: ZAM

DWG 38 of 53

FINAL DRAWINGS SUBMITTAL

VA FORM 08 - 6231

C:\Revit-2022\19.25_ARCH_R22_zmitten\NRITZ.rvt

7/1/2024 10:30:37 AM

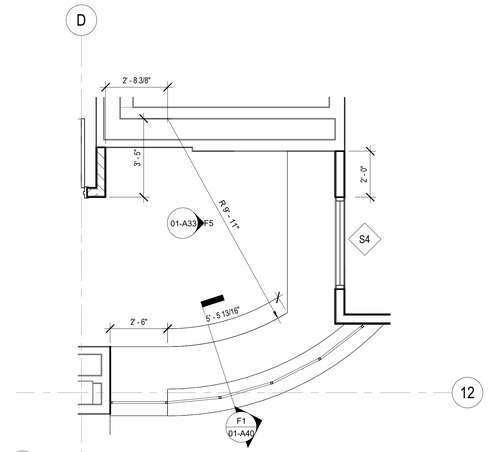

B4 ENLARGED PLAN - C9-64 DESK
3/8" = 1'-0"

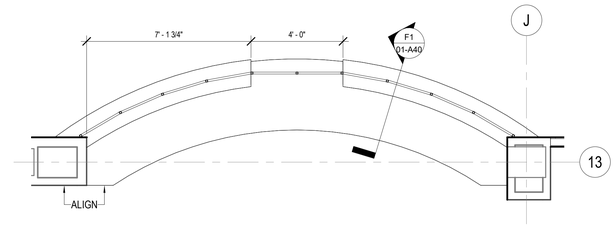

D4 ENLARGED PLAN - C9-27 DESK
3/8" = 1'-0"

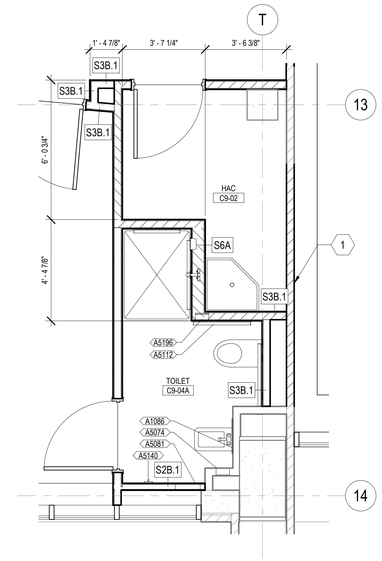

D7 ENLARGED FLOOR PLAN - C9-02 AND C9-03
3/8" = 1'-0"

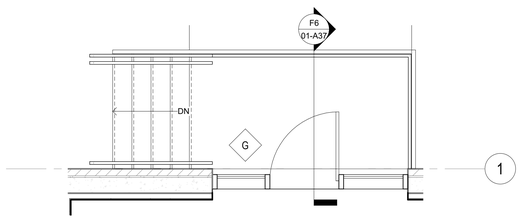

F2 ENLARGED WAREHOUSE STAIR PLAN
3/8" = 1'-0"

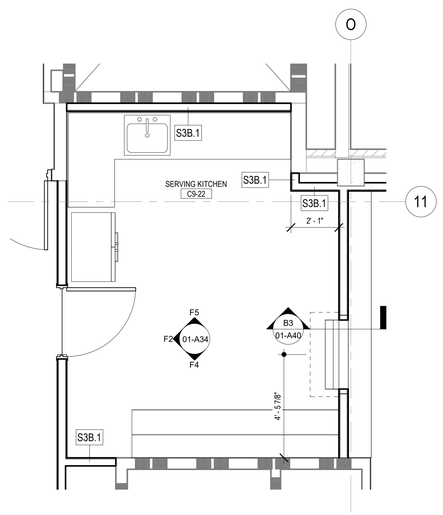

F4 ENLARGED FLOOR PLAN - C9-22
3/8" = 1'-0"

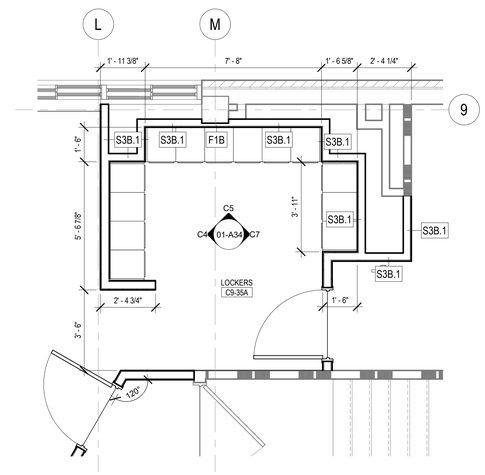

F7 ENLARGED FLOOR PLAN - C9-35A
3/8" = 1'-0"

GENERAL NOTES

A. REFER TO STRUCTURAL, MECHANICAL, PLUMBING AND ELECTRICAL DRAWINGS FOR MORE INFORMATION.

B. REFER TO SHEET 01-I3 FOR ADDITIONAL GENERAL NOTES THAT ARE APPLICABLE.

C. REFER TO SHEET 01-I4 ACCESSIBILITY GUIDELINES FOR MOUNTING HEIGHTS OF FIXTURES AND ACCESSORIES.

D. ALIGN NEW WALLS WITH ADJACENT EXISTING WALLS WHERE NEW WALL EXTENDS IN THE SAME DIRECTION.

E. ALIGN CENTER OF DEMISING WALLS OR FINISH FACE OF CHASE WALLS WITH CENTER OF WINDOW MULLION, UNLESS NOTED OTHERWISE.

F. PARTITIONS TO BE TYPE S3A, UNLESS NOTED OTHERWISE. FURRING ALONG EXTERIOR WALLS TO BE S2B.1, UNLESS NOTED OTHERWISE.

G. REFER TO WINDOW TYPES FOR DIMENSIONS AND ADDITIONAL INFORMATION.

KEYNOTES

00

1 INFILL EXISTING WINDOW OPENING WITH WALL TO MATCH ADJACENT

A1

TOILET ROOM ACCESSORY SCHEDULE

JSN	DESCRIPTION	REMARKS
A5196	DISPENSER, TOILET TISSUE, PSYCHIATRIC	
A1086	MIRROR, SAFETY, PSYCHIATRIC	
A5081	DISPENSER, PAPER TOWEL, PSYCHIATRIC	
A5074	SOAP DISH, RECESSED, SS, PSYCHIATRIC	
A5109	GRAB BAR, 1-1/4" DIA, SS, 2 WALL, W/C ACCESSIBLE	
A5140	HOOK, GARMENT, SECURITY	

Number:	Revisions:	Date:
0	100% CONSTRUCTION DOCUMENTS	04/18/2023
A1	ADDENDUM 1	06/28/2024

CONSULTANTS:

ARCHITECT/ENGINEERS:

VALHALLA ENGINEERING GROUP, LLC
750 W HAMPDEN AVE
SUITE 300
ENGLEWOOD, CO 80110
(720) 550-6307
WWW.VALHALLAENGINEERING.COM
VEG 19.25

STAMP:

U.S. Department of Veterans Affairs

Drawing Title: ENLARGED FLOOR PLANS

Phase: 100% CONSTRUCTION DOCUMENTS

Approved: Project Director

Project Title: RENOVATE 9TH FLOOR MENTAL HEALTH

Location: 1111 EAST END BLVD, WILKES-BARRE, PA 18711

Issue Date: 04/18/2023 | Checked: DR | Drawn: ZAM

Project Number: 693-19-106

Building Number: 01

Drawing Number: 01-A39

DWG 39 of 53

FINAL DRAWINGS SUBMITTAL

VA FORM 08 - 6231

C:\Revit 2022\19.25_ARCH_R22_smithleHARTZ.rvt

7/1/2024 10:30:40 AM

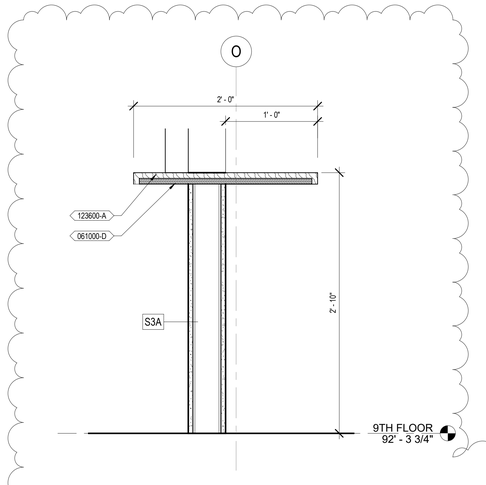

B3 DETAIL @ COILING DOOR COUNTER
1 1/2" = 1'-0"

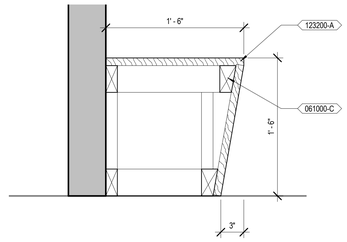

B7 CORRIDOR BENCH DETAIL
1 1/2" = 1'-0"

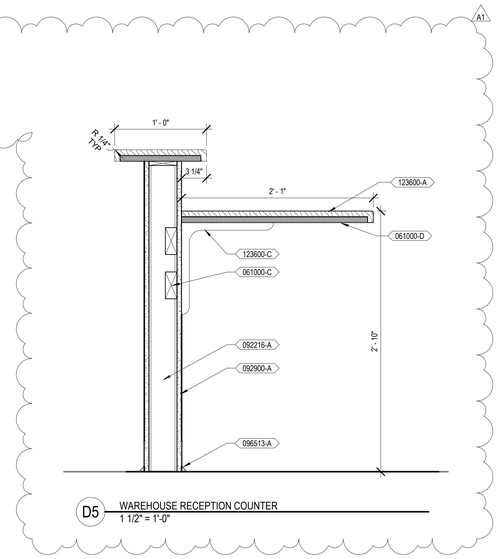

D5 WAREHOUSE RECEPTION COUNTER
1 1/2" = 1'-0"

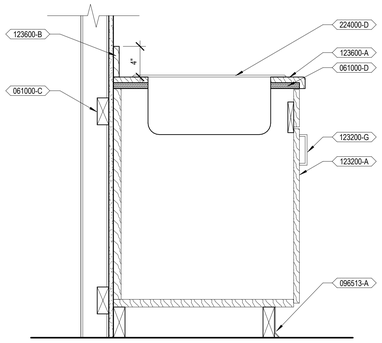

D7 CASEWORK SECTION - CDS 152
1 1/2" = 1'-0"

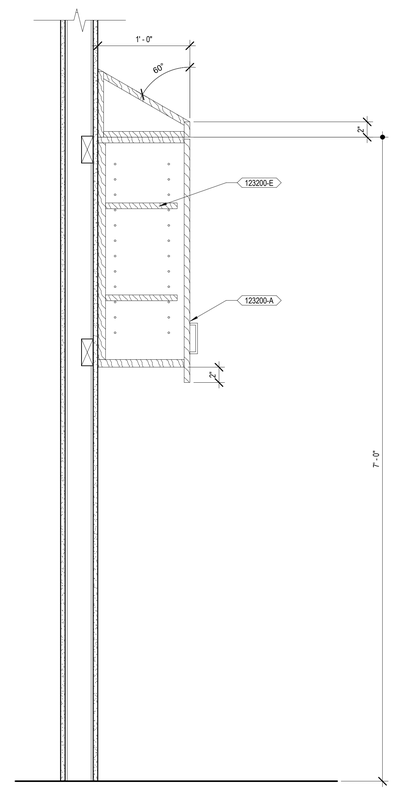

F3 CASEWORK SECTION - CDS 301 & 302
1 1/2" = 1'-0"

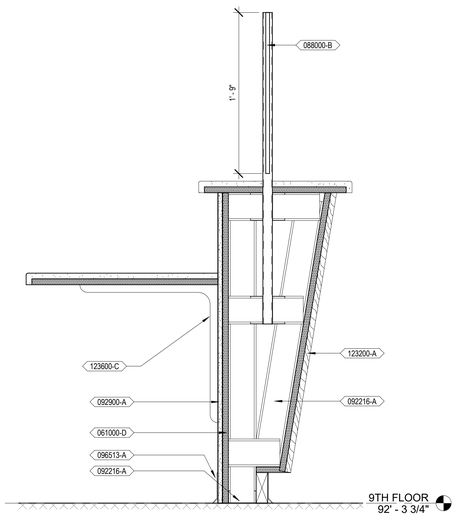

F1 CASEWORK SECTION - NURSE STATION
1 1/2" = 1'-0"

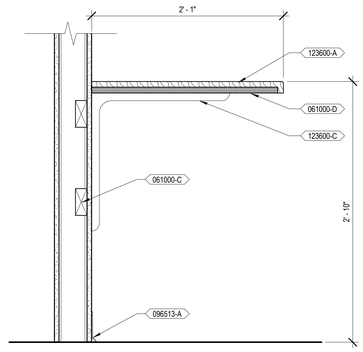

F5 CASEWORK SECTION - CDS 900
1 1/2" = 1'-0"

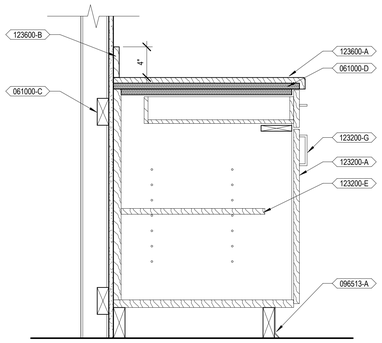

F7 CASEWORK SECTION - CDS 211 & 222
1 1/2" = 1'-0"

GENERAL NOTES

A. REFER TO FINISH LEGEND AND FINISH SCHEDULE FOR SPECIFIC FINISH INFORMATION.

B. ALL MILLWORK/ CASEWORK CONSTRUCTION SHALL MEET AWI PREMIUM STANDARDS, UNLESS NOTED OR SPECIFIED OTHERWISE.

C. ALL EXPOSED MILLWORK/ CASEWORK SURFACES SHALL BE FINISHED W/ PLASTIC LAMINATE TO MATCH ADJACENT PLASTIC LAMINATE SURFACES, UNLESS NOTED OTHERWISE.

D. ALL CASEWORK INTERIORS SHALL BE WHITE MELAMINE, UNLESS NOTED OTHERWISE.

E. ALL FILLER PANELS SHALL BE 1-1/2 INCH WIDE MINIMUM, FINISHED TO MATCH ADJACENT FINISH SURFACES, AND SCRIBED TO FIT ADJACENT WALL, UNLESS NOTED OTHERWISE.

F. ALL BACKSPLASH FINISHES SHALL MATCH COUNTERTOP MATERIAL AND FINISH, UNLESS NOTED OTHERWISE. PLASTIC LAMINATE SIDE/BACKSPLASHES TO HAVE SELF EDGE LAMINATE, UNLESS NOTED OTHERWISE.

G. CONTRACTOR SHALL APPLY CLEAR MILDEW RESISTANT SILICONE SEALANT WHERE BACKSPLASH MEETS WALL AND COUNTERTOP.

H. THE UNDERSIDE OF COUNTERTOPS WITH KNEE OPENINGS, MUST HAVE A WHITE MELAMINE FINISH, UNLESS NOTED OTHERWISE.

I. WATER AND SUPPLY DRAIN PIPES UNDER LAVATORIES AND SINKS SHALL BE INSULATED OR OTHERWISE CONFIGURED TO PROTECT AGAINST CONTACT. THERE SHALL BE NO SHARP OF ABRASIVE SURFACES UNDER LAVATORIES AND SINKS.

KEYNOTES

00

061000-C	WOOD BLOCKING
061000-D	PLYWOOD SHEATHING
088000-B	SECURITY GLAZING
092216-A	METAL STUDS, RE WALL TYPE
092900-A	GYPSUM BOARD
096513-A	RESILIENT BASE, RE FINISH SCHEDULE
123200-A	PLASTIC LAMINATE CASEWORK
123200-E	ADJUSTABLE SHELF
123200-G	WIRE PULL
123600-A	PLASTIC LAMINATE COUNTERTOP
123600-B	PLASTIC LAMINATE BACKSPLASH
123600-C	COUNTER BRACKET
224000-D	HAND SINK, RE PLUMBING

Number:	Revisions:	Date:
0	100% CONSTRUCTION DOCUMENTS	04/18/2023
A1	ADDENDUM 1	06/28/2024

CONSULTANTS:

ARCHITECT/ENGINEERS:

VALHALLA ENGINEERING GROUP, LLC
750 W HAMPDEN AVE
SUITE 300
ENGLEWOOD, CO 80110
(720) 550-6307
WWW.VALHALLAENGINEERING.COM
VEG 19.25

STAMP:

U.S. Department of Veterans Affairs

Drawing Title: MILLWORK SECTIONS

Phase: 100% CONSTRUCTION DOCUMENTS

Approved: Project Director

Project Title: RENOVATE 9TH FLOOR MENTAL HEALTH

Location: 1111 EAST END BLVD, WILKES-BARRE, PA 18711

Issue Date: 04/18/2023 | Checked: DR | Drawn: ZAM

Project Number: 693-19-106

Building Number: 01 & 17

Drawing Number: 01-A40

DWG 40 of 53

FINAL DRAWINGS SUBMITTAL

VA FORM 08 - 6231

C:\Revit 2022\19-25_ARCH_R22_smilleri\NRTZ.rvt

7/1/2024 10:30:42 AM

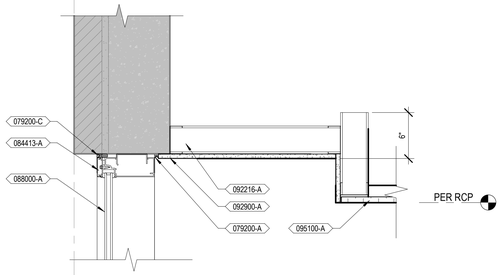

D1 CEILING DETAIL AT WAREHOUSE STOREFRONT
1 1/2" = 1'-0"

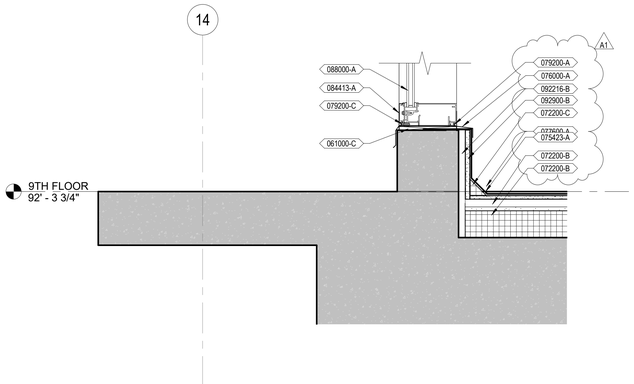

D3 DETAIL @ COURTYARD SOUTH STOREFRONT SILL
1 1/2" = 1'-0"

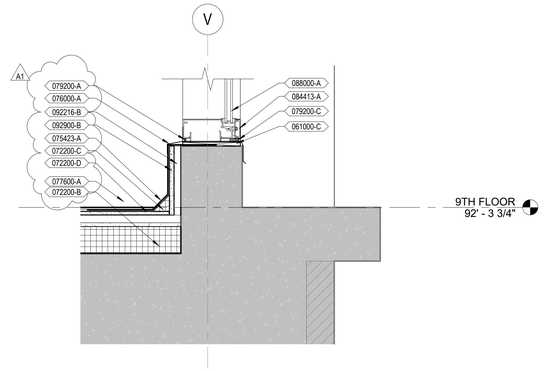

B6 DETAIL @ COURTYARD EAST SUNROOM SILL
1 1/2" = 1'-0"

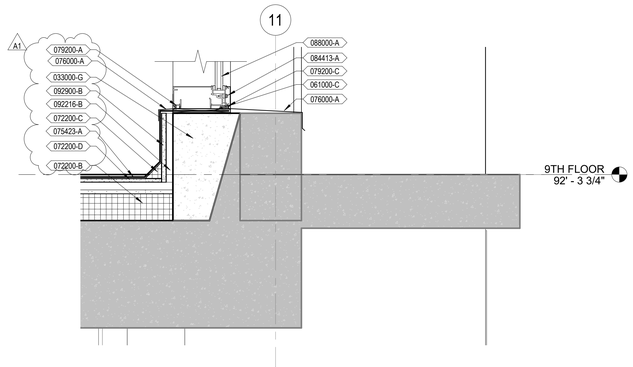

D6 DETAIL @ COURTYARD NORTH STOREFRONT SILL
1 1/2" = 1'-0"

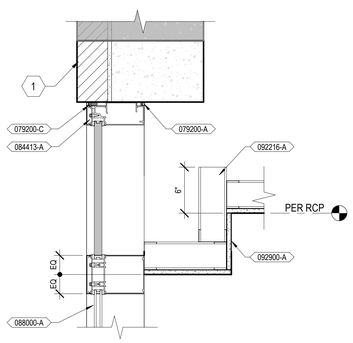

F1 SECTION DETAIL - CEILING TO MULLION
1 1/2" = 1'-0"

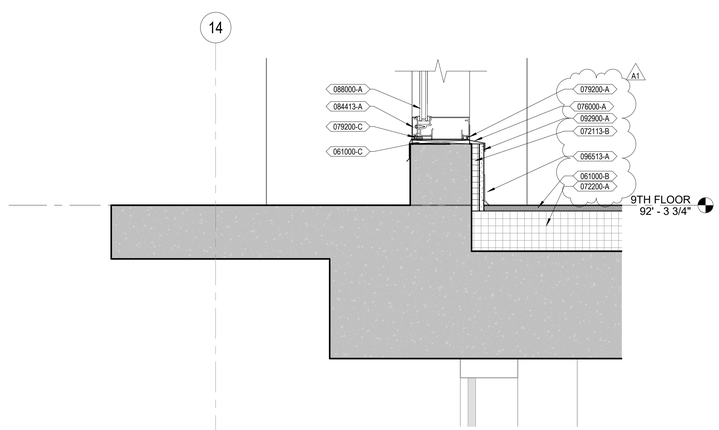

F3 DETAIL @ SUNROOM SOUTH STOREFRONT SILL
1 1/2" = 1'-0"

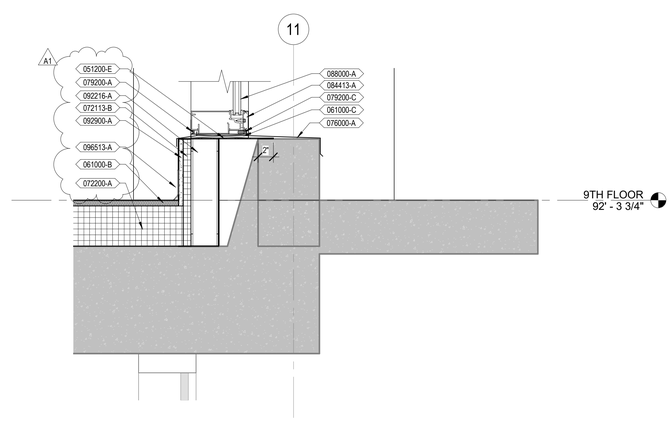

F6 DETAIL @ SUNROOM NORTH STOREFRONT SILL
1 1/2" = 1'-0"

GENERAL NOTES

A. REFER TO STRUCTURAL, MECHANICAL, PLUMBING AND ELECTRICAL DRAWINGS FOR MORE INFORMATION.

B. REFER TO SHEET 01-I3 FOR ADDITIONAL GENERAL NOTES THAT ARE APPLICABLE.

C. REFER TO WALL TYPES SCHEDULE SHEET FOR MORE INFORMATION REGARDING INTERIOR WALL CONSTRUCTION.

KEYNOTES

00

1 INFILL EXISTING WINDOW OPENING WITH WALL TO MATCH ADJACENT

KEYNOTES

######-A

033000-G	CONCRETE WALL
051200-E	STEEL PLATE, RE STRUCTURAL
061000-B	FIRE-RETARDANT-TREATED PLYWOOD SHEATHING
061000-C	WOOD BLOCKING
072113-B	EXTRUDED-POLYSTYRENE BOARD INSULATION WITH TAPED AND SEALED SEAMS
072200-A	RIGID ROOF INSULATION
072200-B	TAPERED ROOF INSULATION
072200-C	ROOF CANT STRIP
072200-D	GLASS MAT, WATER-RESISTANT GYPSUM ROOF BOARD
075423-A	THERMOPLASTIC POLYOLEFIN (TPO) ROOFING SYSTEM
076000-A	PREFINISHED SHEET METAL FLASHING
077600-A	ROOFTOP TURF PAVER SYSTEM
079200-A	JOINT SEALANT
079200-C	BACKER ROD AND SEALANT
084413-A	GLAZED ALUMINUM CURTAIN WALL
088000-A	GLAZING PER GLAZING SCHEDULE
092216-A	METAL STUDS, RE WALL TYPE
092216-B	METAL HAT CHANNEL, RE WALL TYPE
092900-A	GYPSUM BOARD
092900-B	GLASS MAT GYPSUM BOARD
095100-A	ACOUSTICAL PANEL CEILING, RE FINISH SCHEDULE
096513-A	RESILIENT BASE, RE FINISH SCHEDULE

Number:	Revisions:	Date:
0	100% CONSTRUCTION DOCUMENTS	04/18/2023
A1	ADDENDUM 1	06/28/2024

CONSULTANTS:

ARCHITECT/ENGINEERS:

VALHALLA ENGINEERING GROUP, LLC
750 W HAMPDEN AVE
SUITE 300
ENGLEWOOD, CO 80110
(720) 550-6307
WWW.VALHALLAENGINEERING.COM
VEG 19.25

STAMP:

U.S. Department of Veterans Affairs

Drawing Title: SECTION DETAILS

Phase: 100% CONSTRUCTION DOCUMENTS

Approved: Project Director

Project Title: RENOVATE 9TH FLOOR MENTAL HEALTH

Project Number: 693-19-106

Building Number: 01 & 17

Location: 1111 EAST END BLVD, WILKES-BARRE, PA 18711

Issue Date: 04/18/2023 | Checked: DR | Drawn: ZAM

Drawing Number: 01-A43

DWG 43 of 53

FINAL DRAWINGS SUBMITTAL

VA FORM 08 - 6231

C:\Revit 2022\19 25_ARCH_R22_zmillerHNRTZ.rvt

7/17/2024 10:30:45 AM

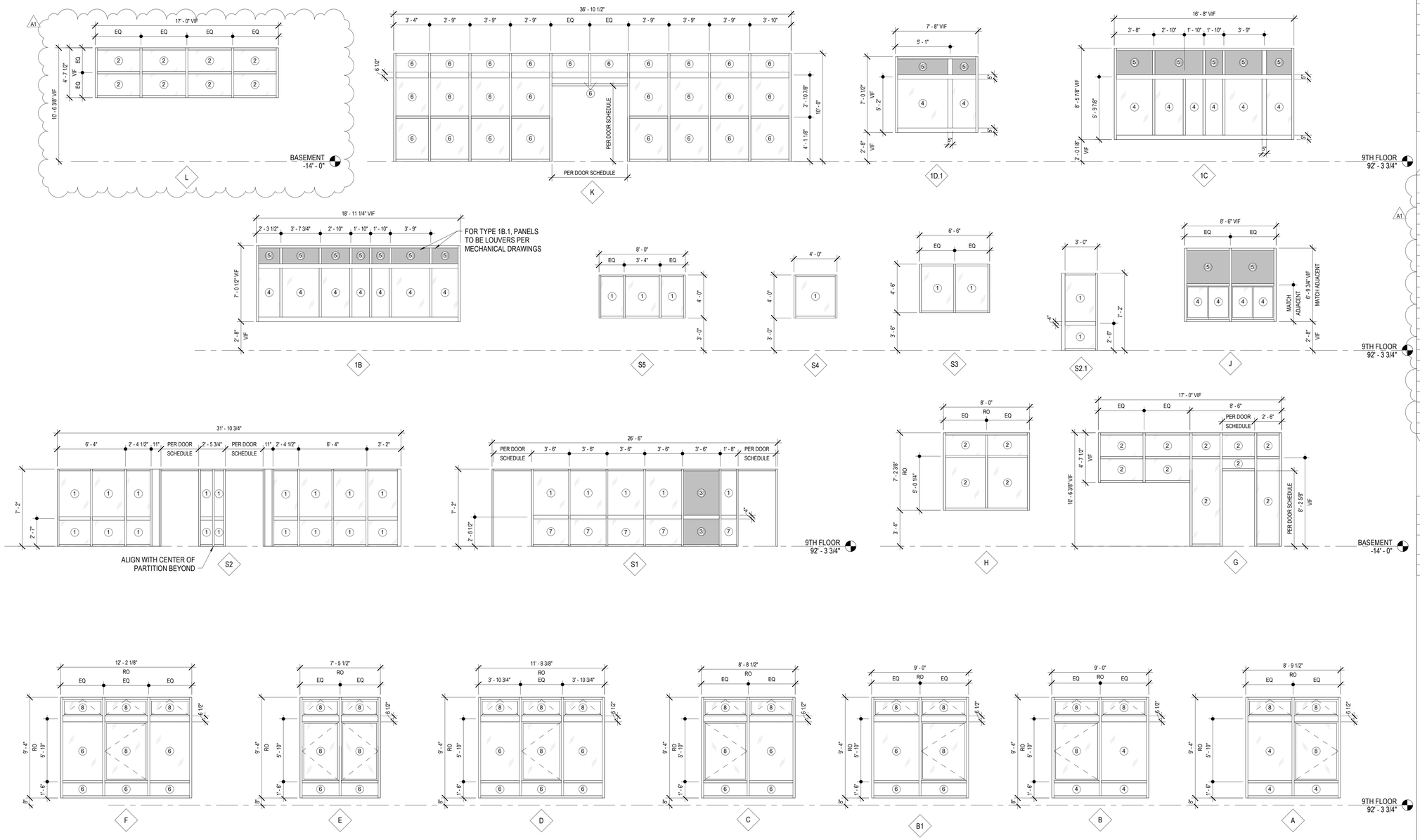

GENERAL NOTES

A. REFER TO SHEET 01-I3 AND 01-A1 FOR ADDITIONAL GENERAL NOTES THAT ARE APPLICABLE.

B. EXTERIOR WINDOW PROFILES FOR SOUTH AND WEST ELEVATIONS ARE REPRESENTATIVE OF INFORMATION FROM DRAWINGS PROVIDED TO VALHALLA FROM VHA COR ON 02/10/2020 FROM VHA PROJECT #693-13-111. WINDOW SIZES HAVE BEEN MODIFIED TO MATCH EXISTING OPENINGS AS UNDERSTOOD BY VALHALLA AND ARE TO BE VERIFIED IN FIELD.

GLAZING TYPE SCHEDULE

TYPE	IMAGE	DESCRIPTION
1		3/8" POLYCARBONATE, CLEAR
2		DOUBLE PANED, LOW-E, ARGON FILLED GLAZING, CLEAR
3		7/16" LAMINATED SPANDREL PANEL
4		DOUBLE PANED, LOW-E, ARGON FILLED GLAZING WITH 3/8" POLYCARBONATE ON INTERIOR, CLEAR
5		INSULATED SPANDREL GLAZING UNIT, DOUBLE PANED, ARGON FILLED
6		DOUBLE PANED, LOW-E, ARGON FILLED GLAZING WITH 3/8" POLYCARBONATE BOTH PANES, CLEAR
7		3/8" POLYCARBONATE, BOD: LUMICOR LUMIFORM NATURAL - COASTAL
8		OPERABLE PANE, GLAZING TYPE TO MATCH REST OF SYSTEM, BOD: KAWNEER GLASSVENT WINDOWS FOR CURTAIN WALL

STOREFRONT/CURTAIN WALL SCHEDULE

TYPE	FRAME TYPE	HEAD DETAIL	JAMB DETAIL	SILL DETAIL
1B	2	E3/01-A48	E3/01-A48 SIM	F3/01-A48
1B.1	2	E3/01-A48	E3/01-A48 SIM	F3/01-A48
1C	2	E3/01-A48	E3/01-A48 SIM	F3/01-A48
1D.1	2	E3/01-A48	E3/01-A48 SIM	F3/01-A48
A	1	C5/01-A44	RE: 01-A41	RE: 01-A43
B	1	C5/01-A44	RE: 01-A41	RE: 01-A43
B1	1	F5/01-A44	RE: 01-A41	RE: 01-A43
C	1	F5/01-A44	RE: 01-A41	RE: 01-A43
D	1	C1/01-A44	RE: 01-A41	RE: 01-A43
E	1	C1/01-A44	RE: 01-A41	RE: 01-A43
F	1	C1/01-A44	RE: 01-A41	RE: 01-A43
G	1	E7/01-A48	E5/01-A48	F5 & F7/01-A48
H	1	E7/01-A48	E5/01-A48	F7/01-A48
J	4	C5/01-A48	C5/01-A48 SIM	C5/01-A48
K	1	F1/01-A44	RE: 01-A41	C7/01-A48
L	1	E7/01-A48	E5/01-A48	F7/01-A48
S1	3	E1/01-A48	D7 & C7/01-A42	F1/01-A48
S2	3	E1/01-A48	C1/01-A48	F1/01-A48
S2.1	3	E1/01-A48	C1/01-A48	F1/01-A48
S3	3	C1/01-A48	C1/01-A48	C1/01-A48
S4	3	C1/01-A48	C1/01-A48	C1/01-A48
S5	3	C1/01-A48	C1/01-A48	C1/01-A48

STOREFRONT/CURTAIN WALL FRAME SCHEDULE

FRAME TYPE	DESCRIPTION
1	BOD: KAWNEER 1600 WALL SYSTEM 1, 7 1/"2 D x 2 1/2" W. ANODIZED
2	MATCH MANUFACTURER, PRODUCT LINE, AND FINISH OF PROJECT NO 693-13-111 - REPLACE EXTERIOR WINDOWS.
3	BOD: KAWNEER TRIFAB 400, 4" D x 1 3/4" W. ANODIZED
4	BOD: MATCH EXISTING NORTH WINDOW FRAMES

Number:	Revisions:	Date:
0	100% CONSTRUCTION DOCUMENTS	04/18/2023
A1	ADDENDUM 1	06/28/2024

CONSULTANTS:

ARCHITECT/ENGINEERS:

VALHALLA ENGINEERING GROUP, LLC
750 W HAMPDEN AVE
SUITE 300
ENGLEWOOD, CO 80110
(720) 550-6307
WWW.VALHALLAENGINEERING.COM
VEG 19.25

STAMP:

U.S. Department of Veterans Affairs

Drawing Title: WINDOW FRAME TYPES

Phase: 100% CONSTRUCTION DOCUMENTS

Approved: Project Director

Project Title: RENOVATE 9TH FLOOR MENTAL HEALTH

Project Number: 693-19-106

Building Number: 01 & 17

Location: 1111 EAST END BLVD, WILKES-BARRE, PA 18711

Issue Date: 04/18/2023 | Checked: DR | Drawn: ZAM

Drawing Number: 01-A47

DWG 46 of 53

FINAL DRAWINGS SUBMITTAL

C:\Revit 2022\19125_ARCH_R22_smillerNRTZ.rvt

7/1/2024 10:30:45 AM

VA FORM 08 - 6231

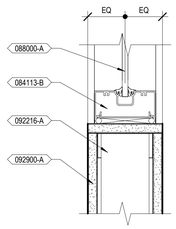

C1 HEAD/SILL/JAMB DETAIL - INTERIOR STOREFRONT
3" = 1'-0"

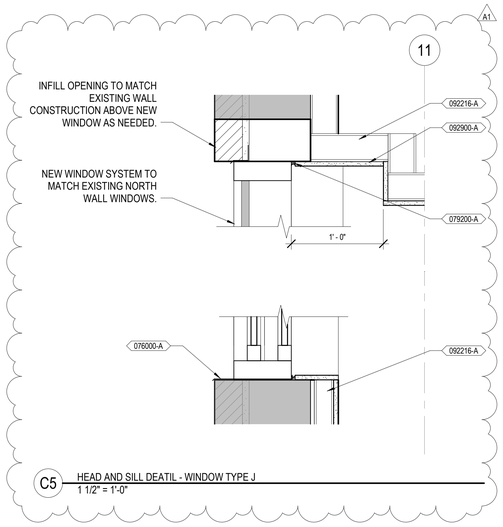

C5 HEAD AND SILL DEATIL - WINDOW TYPE J
1 1/2" = 1'-0"

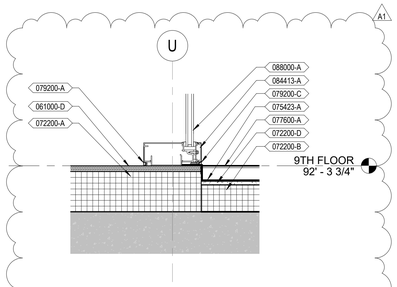

C7 SILL DETAIL - SUNROOM CURTAIN WALL
1 1/2" = 1'-0"

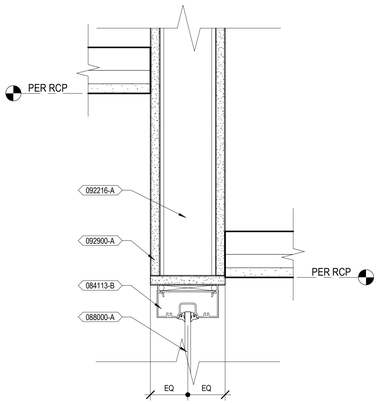

E1 HEAD DETAIL - TYP INTERIOR STOREFRONT
3" = 1'-0"

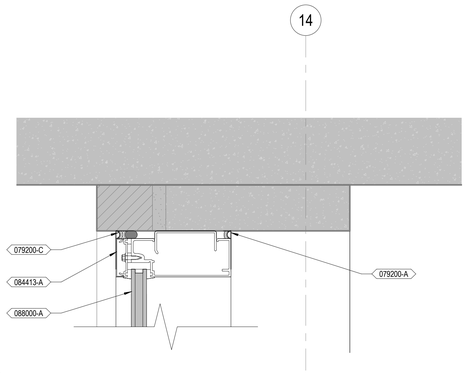

E3 HEAD DETAIL - SOUTH WINDOWS
3" = 1'-0"

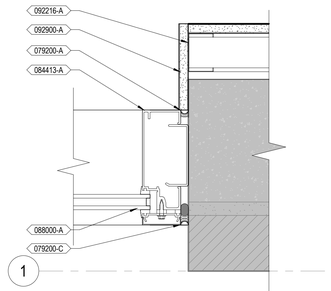

E5 JAMB DETAIL - WAREHOUSE STOREFRONT
3" = 1'-0"

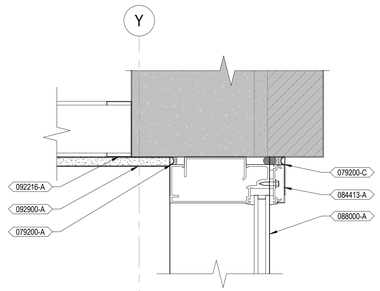

E7 HEAD DETAIL - WAREHOUSE WINDOW
3" = 1'-0"

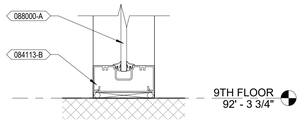

F1 SILL DETAIL - TYP INTERIOR STOREFRONT
3" = 1'-0"

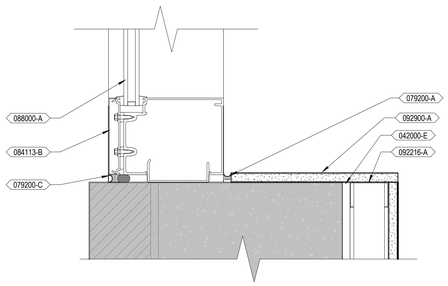

F3 SILL DETIAL - SOUTH WINDOWS
3" = 1'-0"

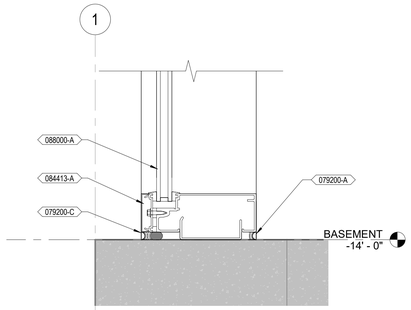

F5 SILL DETAIL - WAREHOUSE STOREFRONT
3" = 1'-0"

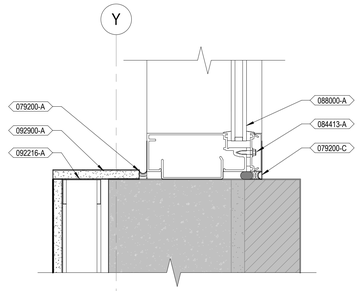

F7 SILL DETAIL - WAREHOUSE WINDOW
3" = 1'-0"

GENERAL NOTES

A. REFER TO SHEET 01-I3 AND 01-A1 FOR ADDITIONAL GENERAL NOTES THAT ARE APPLICABLE.

B. EXTERIOR WINDOW PROFILES FOR SOUTH AND WEST ELEVATIONS ARE REPRESENTATIVE OF INFORMATION FROM DRAWINGS PROVIDED TO VALHALLA FROM VHA COR ON 02/10/2020 FROM VHA PROJECT #693-13-111. WINDOW SIZES HAVE BEEN MODIFIED TO MATCH EXISTING OPENINGS AS UNDERSTOOD BY VALHALLA AND ARE TO BE VERIFIED IN FIELD.

KEYNOTES

<######-A>

042000-E	AIR GAP
061000-D	PLYWOOD SHEATHING
072200-A	RIGID ROOF INSULATION
072200-B	TAPERED ROOF INSULATION
072200-D	GLASS MAT, WATER-RESISTANT GYPSUM ROOF BOARD
075423-A	THERMOPLASTIC POLYOLEFIN (TPO) ROOFING SYSTEM
076000-A	PREFINISHED SHEET METAL FLASHING
077600-A	ROOFTOP TURF PAVER SYSTEM
079200-A	JOINT SEALANT
079200-C	BACKER ROD AND SEALANT
084113-B	ALUMINUM-FRAMED STOREFRONT SYSTEM
084413-A	GLAZED ALUMINUM CURTAIN WALL
088000-A	GLAZING PER GLAZING SCHEDULE
092216-A	METAL STUDS, RE WALL TYPE
092900-A	GYPSUM BOARD

Number:	Revisions:	Date:
0	100% CONSTRUCTION DOCUMENTS	04/18/2023
A1	ADDENDUM 1	06/28/2024

CONSULTANTS:

ARCHITECT/ENGINEERS:

VALHALLA ENGINEERING GROUP, LLC
750 W HAMPDEN AVE
SUITE 300
ENGLEWOOD, CO 80110
(720) 550-6307
WWW.VALHALLAENGINEERING.COM
VEG 19.25

STAMP:

U.S. Department of Veterans Affairs

Drawing Title: WINDOW DETAILS

Phase: 100% CONSTRUCTION DOCUMENTS

Approved: Project Director

Project Title: RENOVATE 9TH FLOOR MENTAL HEALTH

Location: 1111 EAST END BLVD, WILKES-BARRE, PA 18711

Issue Date: 04/18/2023 | Checked: DR | Drawn: ZAM

Project Number: 693-19-106

Building Number: 01 & 17

Drawing Number: 01-A48

DWG 47 of 53

FINAL DRAWINGS SUBMITTAL

VA FORM 08 - 6231

C:\Revit 2022\19-25_ARCH_R22_smillerNXRTZ.rvt

7/1/2024 10:30:46 AM

FINISH SCHEDULE - 9TH FLOOR

ROOM NUMBER	ROOM NAME	FLOORS		WALLS				CEILING	WALL PROTECTION
		FLOOR	BASE	NORTH	EAST	SOUTH	WEST		
C9-00	COURTYARD	PVR-1/TRF-1	-	-	-	-	-	OPEN	
C9-01	EAST SUNROOM	WSF-1/WSF-2	RB-1	-	-	-	EXIST	PNT-C1	
C9-02	HAC	RES-6A	RCB-1	PNT-SC1	PNT-SC1	PNT-SC1	PNT-SC1	ACT-SP	RWC-1
C9-03	GROUP COUNSELING ROOM	WSF-2	RB-1	PNT-1	PNT-1	PNT-1	PNT-1	PNT-C1	
C9-04	MEN'S	WSF-2	WSF-2	PNT-2	PNT-2	PNT-2	PNT-3	PNT-C1	
C9-04A	TOILET	PT-1	PT-1	WP-1	WP-1	WP-1	WP-1	PNT-SC2	
C9-05	TOILET	PT-2	PT-2	PT-2/ PT-3/ PNT-SC1	PT-2/ PT-3/ PNT-SC1	PT-2/ PT-3/ PNT-SC1	PT-2/ PT-3/ PNT-SC1	PNT-C1	
C9-06	MECHANICAL	EXIST	EXIST	EXIST	EXIST	EXIST	EXIST	EXIST	
C9-06A	ELEC	EXIST	EXIST	EXIST	EXIST	EXIST	EXIST	EXIST	
C9-07	OFFICE	WSF-2	RB-1	PNT-2	PNT-3	PNT-2	PNT-2	ACT-1	
C9-08	MEN'S BARIATRIC	WSF-2	WSF-2	PNT-2	PNT-2	PNT-2	PNT-3	PNT-C1	
C9-08A	TOILET	PT-1	PT-1	WP-1	WP-1	WP-1	WP-1	PNT-SC2	
C9-09	ELEC	EXIST	EXIST	EXIST	EXIST	EXIST	EXIST	EXIST	
C9-10	LAUNDRY	RES-6A	RCB-1	PNT-2	PNT-2	PNT-2	PNT-2	PNT-C1	RWC-1
C9-11	QUIET ROOM	HSF-1	HSF-1	PNT-1	PNT-1	PNT-1	PNT-1	PNT-C1	
C9-12	MEN'S	WSF-2	WSF-2	PNT-2	PNT-3	PNT-2	PNT-2	PNT-C1	
C9-12A	TOILET	PT-1	PT-1	WP-1	WP-1	WP-1	WP-1	PNT-SC2	
C9-13	SOILED UTILITY	RES-6A	RCB-1	PNT-SC1	PNT-SC1	PNT-SC1	PNT-SC1	ACT-SP	RWC-1
C9-14	MEN'S	WSF-2	WSF-2	PNT-2	PNT-2	PNT-2	PNT-3	PNT-C1	
C9-14A	TOILET	PT-1	PT-1	WP-1	WP-1	WP-1	WP-1	PNT-SC2	
C9-15	MEN'S BARIATRIC	WSF-2	WSF-2	PNT-2	PNT-2	PNT-2	PNT-3	PNT-C1	
C9-15A	TOILET	PT-1	PT-1	WP-1	WP-1	WP-1	WP-1	PNT-SC2	
C9-16	DINING/ ACTIVITIES	WSF-2	RB-1	PNT-1/ PNT-4	PNT-1/ PNT-4	PNT-1/ PNT-4	RWC-5	PNT-C1	RWC-2, CG-2
C9-17	GROUP THERAPY	WSF-2	RB-1	PNT-1	PNT-1	PNT-1	PNT-1	PNT-C1	
C9-18	MEN'S	WSF-2	WSF-2	PNT-2	PNT-3	PNT-2	PNT-2	PNT-C1	
C9-18A	TOILET	PT-1	PT-1	WP-1	WP-1	WP-1	WP-1	PNT-SC2	
C9-19	ELEC	EXIST	EXIST	EXIST	EXIST	EXIST	EXIST	EXIST	
C9-20	MEN'S	WSF-2	WSF-2	PNT-2	PNT-2	PNT-2	PNT-3	PNT-C1	
C9-20A	TOILET	PT-1	PT-1	WP-1	WP-1	WP-1	WP-1	PNT-SC2	
C9-21	SALLY PORT	RES-6A	RCB-1	PNT-1	PNT-1	PNT-1	PNT-1	PNT-C1	CG-1, RWC-1
C9-22	SERVING KITCHEN	RES-6A	RCB-1	PNT-2	PNT-2	PNT-2	PNT-2	ACT-1	RWC-1
C9-23	ELEVATOR LOBBY	RES-6A	RCB-1	PNT-1	PNT-1	PNT-1	PNT-1	ACT-1	CG-1, RWC-1
C9-24	MEN'S	WSF-2	WSF-2	PNT-2	PNT-3	PNT-2	PNT-2	PNT-C1	
C9-24A	TOILET	PT-1	PT-1	WP-1	WP-1	WP-1	WP-1	PNT-SC2	
C9-25	ANTE ROOM	WSF-2	RB-1	PNT-2	PNT-2	PNT-2	PNT-2	PNT-C1	
C9-25A	TOILET	PT-1	PT-1	WP-1	WP-1	WP-1	WP-1	PNT-SC2	
C9-25B	SECLUSION ROOM	HSF-1	HSF-1	RES-W1	RES-W1	RES-W1	RES-W1	PNT-C1	
C9-26	LOBBY	WSF-1/WSF-2	RB-1	PNT-5	PNT-5	PNT-5	PNT-5	PNT-C2/ PNT-C3	RWC-2, CG-2
C9-27	NURSE'S STATION	WSF-1	RB-2	PNT-1	PNT-5	PNT-5	PNT-5	ACT-1 & PNT-C2	
C9-27A	NURSE'S WORKROOM	WSF-1	RB-2	PNT-1	PNT-1	PNT-1	PNT-1	ACT-1	
C9-28	SALLY PORT	WSF-2	RB-1	PNT-1	PNT-1	PNT-1	PNT-1	PNT-C2	RWC-1
C9-29	INTERVIEW	WSF-2	RB-1	PNT-2	PNT-2	PNT-2	PNT-1	PNT-C1	
C9-30	ELEVATOR LOBBY	WSF-1/WSF-2	RB-1	PNT-1	PNT-1	PNT-1	PNT-1	ACT-1 & PNT-C2	CG-1, RWC-1
C9-31	TELECOM ROOM	N/A	RB-1	PNT-2	PNT-2	PNT-2	PNT-2	OPEN	
C9-32	MECHANICAL	N/A	RB-1	PNT-2	PNT-2	PNT-2	PNT-2	OPEN	
C9-33	STAFF TOILET	PT-2	PT-2	PT-2/ PT-3/ PNT-SC1	PT-2/ PT-3/ PNT-SC1	PT-2/ PT-3/ PNT-SC1	PT-2/ PT-3/ PNT-SC1	PNT-SC2	
C9-34	ELEC	EXIST	EXIST	EXIST	EXIST	EXIST	EXIST	EXIST	
C9-34A	ELEC	EXIST	EXIST	EXIST	EXIST	EXIST	EXIST	EXIST	
C9-35	NURSE'S LOUNGE	LVT-1	RB-2	PNT-1	PNT-1	PNT-1	PNT-3	ACT-1 & PNT-C1	
C9-35A	LOCKERS	LVT-1	RB-2	PNT-1	PNT-1	PNT-1	PNT-1	ACT-1	
C9-35B	CLOSET	LVT-1	RB-2	PNT-2	PNT-2	PNT-2	PNT-2	PNT-C1	
C9-36	MECH	EXIST	EXIST	EXIST	EXIST	EXIST	EXIST	EXIST	
C9-37	TEAMING/ COUNSELING	WSF-2	RB-1	PNT-1	PNT-1	PNT-5	-	PNT-C1	
C9-38	EXAM/ INTAKE	WSF-2	WSF-2	PNT-1	PNT-1	PNT-5	-	PNT-C1	
C9-39	HEAD NURSE OFFICE	WSF-1	RB-2	PNT-3	PNT-2	PNT-2	PNT-2	ACT-1	
C9-40	MED	WSF-2	RB-1	PNT-2	PNT-2	PNT-2	PNT-2	ACT-1	
C9-41	WOMEN'S	WSF-2	WSF-2	PNT-2	PNT-3	PNT-2	PNT-2	PNT-C1	
C9-41A	TOILET	PT-1	PT-1	WP-1	WP-1	WP-1	WP-1	PNT-SC2	
C9-42	STAFF TOILET	PT-2	PT-2	PT-2/ PT-3/ PNT-SC1	PT-2/ PT-3/ PNT-SC1	PT-2/ PT-3/ PNT-SC1	PT-2/ PT-3/ PNT-SC1	PNT-SC2	
C9-43	WOMEN'S	WSF-2	WSF-2	PNT-2	PNT-2	PNT-2	PNT-3	PNT-C1	
C9-43A	TOILET	PT-1	PT-1	WP-1	WP-1	WP-1	WP-1	PNT-SC2	
C9-44	WOMEN'S	WSF-2	WSF-2	PNT-2	PNT-2	PNT-2	PNT-3	PNT-C1	
C9-44A	TOILET	PT-1	PT-1	WP-1	WP-1	WP-1	WP-1	PNT-SC2	
C9-45	PATIENT STORAGE	RES-6A	RCB-1	PNT-2	PNT-2	PNT-2	PNT-2	PNT-C1	
C9-46	LINEN	RES-6A	RCB-1	PNT-SC1	PNT-SC1	PNT-SC1	PNT-SC1	PNT-SC2	
C9-47	OFFICE/ GROUP ROOM	WSF-2	RB-1	PNT-2	PNT-2	PNT-2	PNT-2	PNT-C1	
C9-47A	STORAGE	WSF-2	RB-1	PNT-1	PNT-1	PNT-1	PNT-1	PNT-C1	
C9-48	LAUNDRY	RES-6A	RCB-1	PNT-2	PNT-2	PNT-2	PNT-2	PNT-C1	RWC-1
C9-49	WOMEN'S BARIATRIC	WSF-2	WSF-2	PNT-2	PNT-2	PNT-2	PNT-3	PNT-C1	
C9-49A	TOILET	PT-1	PT-1	WP-1	WP-1	WP-1	WP-1	PNT-SC2	
C9-50	MEETING	WSF-2	RB-1	PNT-2	PNT-2	PNT-2	PNT-2	PNT-C1	
C9-51	HAC	RES-6A	RCB-1	PNT-SC1	PNT-SC1	PT-2/PNT-2	PNT-SC1	ACT-SP	RWC-1
C9-52	SALLY PORT	WSF-1	RB-2	PNT-1	PNT-1	PNT-1	PNT-1	PNT-C1	RWC-1
C9-53	ELEC	EXIST	EXIST	EXIST	EXIST	EXIST	EXIST	EXIST	
C9-54	ELEVATOR LOBBY	WSF-1/WSF-2	RB-1	PNT-1	PNT-1	PNT-1	PNT-1	ACT-1 & PNT-C2	CG-1, RWC-1
C9-55	MECHANICAL	EXIST	EXIST	EXIST	EXIST	EXIST	EXIST	EXIST	
C9-56	CLEAN STORAGE	RES-6A	RCB-1	PNT-SC1	PNT-SC1	PNT-SC1	PNT-SC1	ACT-SP	
C9-57	HAC	RES-6A	RCB-1	PNT-SC1	PNT-SC1	PNT-SC1	PNT-SC1	ACT-SP	RWC-1
C9-58	ELECTRICAL	EXIST	EXIST	EXIST	EXIST	EXIST	EXIST	EXIST	
C9-59	PREFUNCTION/ COLLABORATION	LVT-1	RB-2	PNT-1	PNT-1	PNT-1	PNT-1	ACT-1 & PNT-C1	
C9-60	CONFERENCE	LVT-1	RB-2	PNT-1	PNT-1	PNT-1	PNT-4	ACT-1	
C9-61	WORKSTATIONS	LVT-1	RB-2	PNT-1	PNT-4	PNT-1	PNT-1	ACT-1	
C9-62	ELEC	EXIST	EXIST	EXIST	EXIST	EXIST	EXIST	EXIST	
C9-63	ELEC	EXIST	EXIST	EXIST	EXIST	EXIST	EXIST	EXIST	
C9-64	NURSE'S STATION	WSF-1	RB-2	PNT-1	RWC-2	PNT-1	PNT-1	ACT-1 & PNT-C2	
C9-65	MED	WSF-1	RB-2	PNT-2	PNT-2	PNT-2	PNT-2	ACT-1	
C9-66	GERIATRIC	WSF-2	WSF-2	PNT-2	PNT-3	PNT-2	PNT-2	PNT-C1	
C9-66A	TOILET	PT-1	PT-1	WP-1	WP-1	WP-1	WP-1	PNT-SC2	
C9-67	BARIATRIC GERIATRIC	WSF-2	WSF-2	PNT-2	PNT-2	PNT-2	PNT-3	PNT-C1	
C9-67A	TOILET	PT-1	PT-1	WP-1	WP-1	WP-1	WP-1	PNT-SC2	
C9-68	BARIATRIC GERIATRIC	WSF-2	WSF-2	PNT-2	PNT-2	PNT-2	PNT-3	PNT-C1	
C9-68A	TOILET	PT-1	PT-1	WP-1	WP-1	WP-1	WP-1	PNT-SC2	
C9-69	OFFICE	WSF-2	RB-1	PNT-2	PNT-3	PNT-2	PNT-2	PNT-C1	
C9-70	CLEAN UTILITY	RES-6A	RCB-1	PNT-SC1	PNT-SC1	PNT-SC1	PNT-SC1	PNT-SC2	
C9-71	GROUP THERAPY	WSF-2	RB-1	PNT-1	PNT-1	PNT-1	PNT-1	PNT-C1	
C9-72	DAY/TV	WSF-2	RB-1	PNT-1	PNT-1	PNT-1	PNT-1	PNT-C1	

FINISH SCHEDULE - 9TH FLOOR

ROOM NUMBER	ROOM NAME	FLOORS		WALLS				CEILING	WALL PROTECTION
		FLOOR	BASE	NORTH	EAST	SOUTH	WEST		
C9-72A	GERIATRIC DINING	WSF-2	RB-1	PNT-1	PNT-1	PNT-1	PNT-1	PNT-C1	
C9-C01	CORRIDOR	WSF-1/WSF-2	RB-1	RE ELEVATIONS	PNT-1/ RWC-3	RE ELEVATIONS	PNT-1	PNT-C1/ PNT-C2	HR-1, CG-1, ECG-1, RE ELEVATIONS
C9-C02	CORRIDOR	WSF-2	RB-1	PNT-1	PNT-1	PNT-1	PNT-1	PNT-C1	RWC-1
C9-C03	CORRIDOR	WSF-1/WSF-2	RB-1	RE ELEVATIONS	PNT-1	RE ELEVATIONS	RWC-3	PNT-C1/ PNT-C2/ PNT-C3	HR-1, CG-1, ECG-1, RE ELEVATIONS
C9-C04	CORRIDOR	WSF-2	RB-1	PNT-1	PNT-1	PNT-1	PNT-1	PNT-C2	CG-1, RWC-1
C9-C05	CORRIDOR	WSF-1	RB-2	PNT-1	PNT-1	PNT-5	PNT-1	ACT-1	
C9-C06	CORRIDOR	WSF-1/WSF-2	RB-1	RE ELEVATIONS	PNT-1/RWC-3	RE ELEVATIONS	PNT-1	PNT-C1/ PNT-C2/ PNT-C3	HR-1, CG-1, ECG-1, RE ELEVATIONS
C9-C07	CORRIDOR	WSF-2	RB-1	PNT-1	PNT-1	PNT-1	PNT-1	PNT-C2	RWC-1
C9-C08	CORRIDOR	WSF-1/WSF-2	RB-1	RE ELEVATIONS	RWC-3	RE ELEVATIONS	PNT-1	PNT-C2/ PNT-C3	HR-1, CG-1, ECG-1, RE ELEVATIONS
C9-C09	CORRIDOR	WSF-1/WSF-2	RB-1	RE ELEVATIONS	PNT-1	RE ELEVATIONS	PNT-1/ RWC-3	PNT-C1	HR-1, CG-1, ECG-1, RE ELEVATIONS

FINISH SCHEDULE - WAREHOUSE

ROOM NUMBER	ROOM NAME	FLOORS		WALLS				CEILING	WALL PROTECTION
		FLOOR	BASE	NORTH	EAST	SOUTH	WEST		
L1-001	OXYGEN STORAGE	EXIST	EXIST	EXIST	EXIST	EXIST	EXIST	EXIST	
L1-100	STORAGE	EXIST	RB-3	PNT-2	PNT-2	PNT-2	PNT-2	OPEN	
L1-100A	ELEC	EXIST	RB-3	PNT-2	PNT-2	PNT-2	PNT-2	OPEN	
L1-100E	TELECOM ROOM	EXIST	RB-3	PNT-2	PNT-2	PNT-2	PNT-2	OPEN	
L1-100F	LOCKERS	LVT-1	RB-3	PNT-2	PNT-2	PNT-2	PNT-2	PNT-C1	
L1-100G	TOILET	PT-2	PT-2	PT-2/ PT-3/ PNT-SC1	PT-2/ PT-3/ PNT-SC1	PT-2/ PT-3/ PNT-SC1	PT-2/ PT-3/ PNT-SC1	PT-2/ PT-3/ PNT-SC1	
L1-100H	OFFICE	LVT-1	RB-3	PNT-3	PNT-2	PNT-2	PNT-2	ACT-1	
L1-100J	LOADING DOCK	EXIST	RB-3	PNT-2	PNT-2	PNT-2	PNT-2	EXIST	
L1-101	STORAGE	CPT-1	EXIST	PNT-2	PNT-2	PNT-2	PNT-2	ACT-1	
L1-102	SECRETARY	CPT-3	RB-3	PNT-2	PNT-2	PNT-2	PNT-3	ACT-1	
L1-102A	CLOSET	CPT-3	RB-3	PNT-2	PNT-2	PNT-2	PNT-2	PNT-C1	
L1-103	OPEN OFFICE	CPT-1/CPT-2	RB-3	PNT-3	PNT-2	PNT-2	PNT-2	ACT-1 & PNT-C1	
L1-104	COPY/LOCKERS	CPT-1	RB-3	PNT-2	PNT-2	PNT-2	PNT-2	ACT-1 & PNT-C1	
L1-105	TOILET	PT-2	PT-2	PT-2/ PT-3/ PNT-SC1	PT-2/ PT-3/ SC1	PT-2/ PT-3/ SC1	PT-2/ PT-3/ PNT-SC1	PT-2/ PT-3/ PNT-SC1	
L1-106	TOILET	PT-2	PT-2	PT-2/ PT-3/ PNT-SC1	PT-2/ PT-3/ SC1	PT-2/ PT-3/ PNT-SC1	PT-2/ PT-3/ PNT-SC1	PT-2/ PT-3/ PNT-SC1	
L1-107	OFFICE	CPT-1	RB-3	PNT-2	PNT-2	PNT-3	PNT-2	ACT-1	
L1-108	OFFICE	CPT-1	RB-3	PNT-3	PNT-2	PNT-2	PNT-2	ACT-1	
L1-109	OFFICE	CPT-1	RB-3	PNT-2	PNT-2	PNT-3	PNT-2	ACT-1	
L1-110	OFFICE	CPT-1	RB-3	PNT-3	PNT-2	PNT-2	PNT-2	ACT-1	
L1-111	CONFERENCE	CPT-2	RB-3	PNT-3	PNT-2	PNT-2	PNT-2	ACT-1 & PNT-C1	
L1-112	MECH	EXIST	RB-3	PNT-2	PNT-2	PNT-2	PNT-2	OPEN	

FINISH LEGEND

SYMBOL	MATERIAL	MANUFACTURER	TYPE	COLOR	COMMENTS
ACT-1	ACOUSTIC CEILING TILE	ARMSTRONG	ULTIMA 24 X 24" SQUARE LAY-IN	WHITE	PRELUDE XL 15/16" EXPOSED TEE GRID, WHITE
ACT-SP	ACOUSTIC CEILING TILE - SPECIAL FACED	ARMSTRONG	CALLA HEALTH ZONE 24" X 24" SQUARE LAY-IN	WHITE	
CG-1	CORNER GUARD	ACROVYN	FS-10N	PARCHMENT - #253	PROVIDE AT OUTSIDE CORNERS IN SCHEDULED ROOMS
CG-2	CORNER GUARD	ACROVYN	FS-10N	CUCUMBER - #1595	PROVIDE AT OUTSIDE CORNERS IN SCHEDULED ROOMS AND WHERE INDICATED ON AE640
CG-3	CORNER GUARD	ACROVYN	FS-10N	SMOKEY BLUE - #1576	PROVIDE WHERE INDICATED ON FINISH PLANS
CPT-1	CARPET TILE	MANNINGTON	EXCHANGE 2 - TRANSMIT	CHAT 35648	
CPT-2	CARPET TILE	MANNINGTON	EXCHANGE 2 - TRANSMIT	HAPTICS 13143	
CPT-3	CARPET TILE	MANNINGTON	EXCHANGE 2 - TRANSMIT	HOTSPOT 15149	
CT-1	CERAMIC TILE	CROSSVILLE	SIMPATICO 12	FELLOWSHIP - SKU# LWT02.11224S	
ECG-1	END CAP GUARD	ACROVYN	FSC-25	SMOKEY BLUE - #1576	RE DETAIL B7/01-A42
ECG-2	END CAP GUARD	ACROVYN	FSC-25	PARCHMENT - #253	PROVIDE WHERE INDICATED ON FINISH PLANS
HR-1	HAND RAIL	ACROVYN	HRB-10CCM	BRUSHED SILVER - #410	PROVIDE IN SCHEDULED ROOMS PER DETAIL F7
HSF-1	HOMOGENEOUS SHEET FLOORING WITH FOAM BACKING	TARKETT	IQ GRANIT ACOUSTIC	LIGHT SAND 0323 - REF # 21155323	INSTALL WITH INTEGRAL COVE BASE
LVT-1	LUXURY VINYL TILE	MANNINGTON	SPACIA WOOD 6" x 36"	MADISON MAPLE PEPPER BARK - SS5W12237	
PLM-1	PLASTIC LAMINATE			WHITE	FOR CASEWORK IN NURSE AREAS
PNT-1	PAINT	SHERWIN WILLIAMS	LATEX PAINT - SATIN	AGED WHITE - SW9180	
PNT-2	PAINT	SHERWIN WILLIAMS	LATEX PAINT - SATIN	IVORY LACE - SW7013	
PNT-3	PAINT	SHERWIN WILLIAMS	LATEX PAINT - SATIN	SLEEPY HOLLOW - SW9145	
PNT-4	PAINT	SHERWIN WILLIAMS	LATEX PAINT - SATIN	RECYCLED GLASS - SW7747	INCLUDING COLUMNS OF SCHEDULED ROOM
PNT-5	PAINT	SHERWIN WILLIAMS	LATEX PAINT - SATIN	FRIENDLY YELLOW - SW6680	
PNT-C1	PAINTED GYP BOARD	SHERWIN WILLIAMS	LATEX PAINT - SATIN	HIGH REFLECTIVE WHITE - SW7757	
PNT-C2	PAINTED GYP BOARD	SHERWIN WILLIAMS	LATEX PAINT - SATIN	COTTON WHITE - SW7104	APPLY TO CEILINGS >7'-6"
PNT-C3	PAINTED GYP BOARD	SHERWIN WILLIAMS	LATEX PAINT - SATIN	SPORTY BLUE - SW6522	APPLY TO CEILINGS BY DOORS WITH RWC-3 ON WALLS
PNT-SC1	PAINT - SPECIAL COATED	SHERWIN WILLIAMS	SUPREME HIGH BUILD LATEX - SEMI GLOSS	IVORY LACE - SW7013	
PNT-SC2	PAINT - SPECIAL COATED	SHERWIN WILLIAMS	SUPREME HIGH BUILD LATEX - SEMI GLOSS	HIGH REFLECTIVE WHITE - SW7757	
PT-1	PORCELAIN TILE	CROSSVILLE	ALASKA 2 x 2" MOSAIC	BONE - SKU# ASK02.10202MOS	
PT-2	PORCELAIN TILE	CROSSVILLE	MOONSTRUCK 12 x 24" FIELD TILE	LUNA - SKU# AV302.11224UPS	
PT-3	PORCELAIN TILE	CROSSVILLE	MOONSTRUCK 4 x 24" TRIM	LUNA - SKU# AV302.10424BNS	
PVR-1	ROOFTOP PAVERS	TILE TECH	PORCELAIN PAVERS	QUARTZITE CLOUD	USE WITH HEX-TRAY SYSTEM ON ADJUSTABLE PEDESTALS
RB-1	RESILIENT BASE (RUBBER OR VINYL)	ROPPE	NO TOE OC - 4" X 120' x 0.080"	NUTMEG - 623	
RB-2	RESILIENT BASE (RUBBER OR VINYL)	ROPPE	NO TOE OC - 4" X 120' x 0.080"	CHAMELEON - 624	
RB-3	RESILIENT BASE (RUBBER OR VINYL)	ROPPE	NO TOE OC - 4" X 120' x 1/8"	BLACK????	
RCB-1	RESINOUS FLOOR COVE BASE	DUR-A-FLEX	POLYCRETE-WR	DARK GREY	
RES-6A	RESINOUS URETHANE FLOORING	DUR-A-FLEX	POLY-CRETE MDB	DARK GREY	
RES-W1	EPOXY WALL COATING	SHERWIN WILLIAMS	EPOXY PAINT	IVORY LACE - SW7013	
RWC-1	RIGID WALL COVERING	ACROVYN	WALL COVERING	SOLID COLORS - PARCHMENT - #253	APPLY TO 4' AFF WHERE SCHEDULED
RWC-2	RIGID WALL COVERING	ACROVYN	SOLID COLORS	SOLID COLORS - CUCUMBER - #1595	APPLY IN SCHEDULED ROOMS TO 4' AFF, APPLY FULL HEIGHT WHERE SHOWN
RWC-3	RIGID WALL COVERING	ACROVYN	SOLID COLORS	SOLID COLORS - SMOKEY BLUE - #1576	FULL HEIGHT WALL COVERING, ALIGN WITH FINISH FLOOR PATTERN UNO
RWC-4	RIGID WALL COVERING	LUMICOR	WALL PROTECTION - LUMIFORM 3/64"	NATURAL LEAVES	WITH "OLIVE" AND "CLOVER" SPECTRUM COLORING
RWC-5	RIGID WALL COVERING	ACROVYN BY DESIGN	WALL COVERING	PATTERNS - PEBBLES - STORM	
RWP-1	RESIN WALL PANEL	LUMICOR	WALL PROTECTION DECOR	COASTAL GRASS + CAMEO	FOR CLADDING OF NURSE STATION DESKS
SS-1	SOLID SURFACE COUNTERTOP	CORIAN	SOLID SURFACE	COCOA PRIMA	COUNTERTOPS IN NURSE STATIONS AND WORK AREAS
SS-2	SOLID SURFACE COUNTERTOP	CORIAN	SOLID SURFACE	NIMBUS PRIMA	COUNTERTOP IN DINING ROOM
TRF-1	SYNTHETIC TURF	TILE TECH	SYNTHETIC TURF AND TURF TRAYS	PET TURF	USE WITH ADJUSTABLE PEDESTALS TO CREATE A FLAT SYSTEM
WP-1	WALL PANEL INSTALLATION	ONYX COLLECTION	SHOWER WALL PANEL	TIRAMISU	
WSF-1	WELDED SEAM SHEET FLOORING	MANNINGTON	REALITIES II HETEROGENEOUS SHEET	ANTIQUE OAK II - DATE - 5606R	
WSF-2	WELDED SEAM SHEET FLOORING	MANNINGTON	REALITIES II HETEROGENEOUS SHEET	WILD CHERRY - SHAKER - 5645R	APPLY WITH "FLASH COVING" WHERE SCHEDULED AS WALL BASE

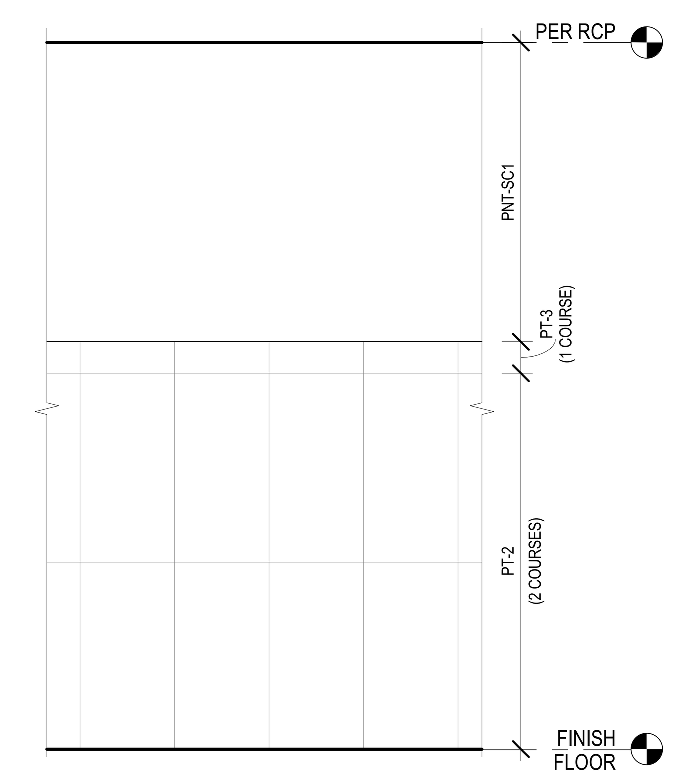

E4 TYPICAL WALL TILE COURSING IN TOILET ROOMS
3/4" = 1'-0"

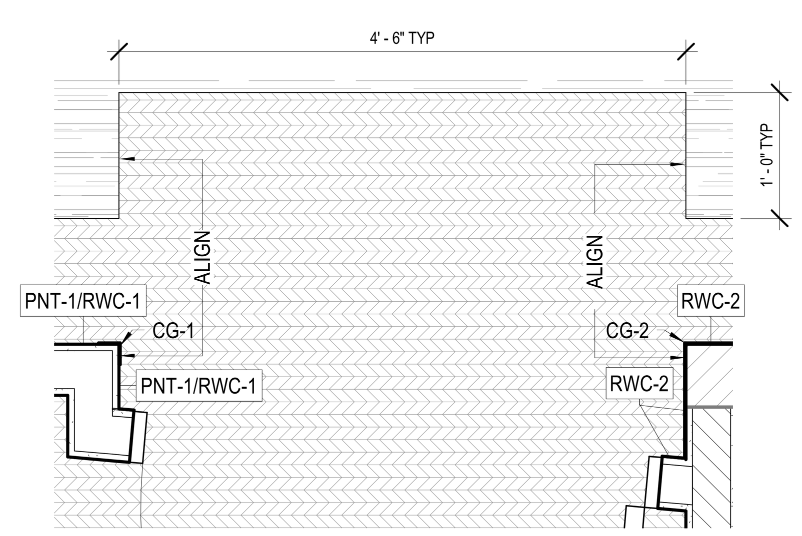

F4 TYPICAL FINISHES AT PATIENT ROOM ENTRY
1" = 1'-0"

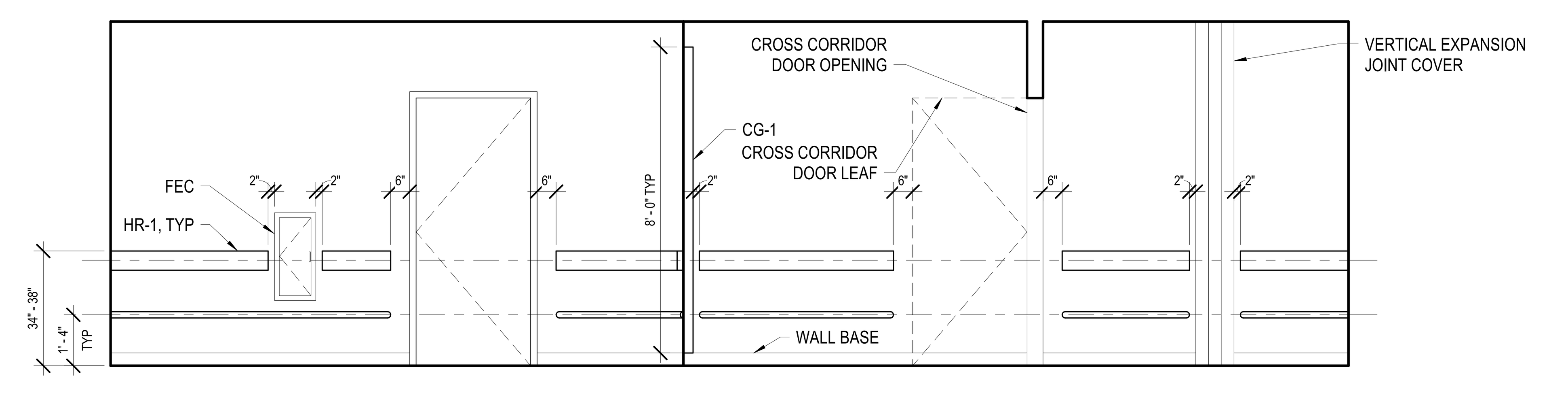

F7 TYPICAL WALL PROTECTION ELEVATION
3/8" = 1'-0"

Number:	Revisions:	Date:
0	100% CONSTRUCTION DOCUMENTS	04/18/2023
A1	ADDENDUM 1	06/28/2024

CONSULTANTS:

ARCHITECT/ENGINEERS:

VALHALLA ENGINEERING GROUP, LLC
750 W HAMPDEN AVE
SUITE 300
ENGLEWOOD, CO 80110
(720) 550-6307
WWW.VALHALLAENGINEERING.COM
VEG 19.25

STAMP:

U.S. Department of Veterans Affairs

Drawing Title: FINISH SCHEDULE

Approved: Project Director

Phase: 100% CONSTRUCTION DOCUMENTS

Project Title: RENOVATE 9TH FLOOR MENTAL HEALTH

Location: 1111 EAST END BLVD, WILKES-BARRE, PA 18711

Issue Date: 04/18/2023 | Checked: DR | Drawn: ZAM

Project Number: 693-19-106

Building Number: 01 & 17

Drawing Number: 01-A49

DWG 49 of 53

FINAL DRAWINGS SUBMITTAL